6.9 Pressure circulating system (DUS) (optional)

- For normal spraying operation, the pressure circulating system should usually be switched on.
- When using drag hoses, the pressure circulating system should usually be switched off.

The pressure circulating system

- enables the constant circulation of liquid in the spray line. For these purposes, a suction port hose (Fig. 89/1) is assigned to each part width section.
- enables operation using spray liquid or flushing water, as desired.
- reduces the undiluted residue for all spray lines to 2 l.

The constant circulation of liquid

- enables production of an even spray pattern right from the start, because spray liquid is available at every spraying nozzle immediately after the sprayer boom is switched on, with no delay.
- prevents damage to the spray line.

The principal components of the pressure circulating system are:

- one suction port hose (Fig. 89/1) per part width section.
- the DUS switchover tap (Fig. 90/1).
- the DUS pressure relief valve (Fig. 90/2). The DUS pressure relief valve is permanently set at the factory and reduces the pressure in the pressure circulating system to 1 bar.

→ If the DUS switchover tap is in position (Fig. 90/A), the pressure circulating system is switched on.

→ If the DUS switchover tap is in position (Fig. 90/B), the pressure circulating system is switched off.

→ if the DUS switchover tap is in position (Fig. 90/C), liquid is released from the field sprayer.

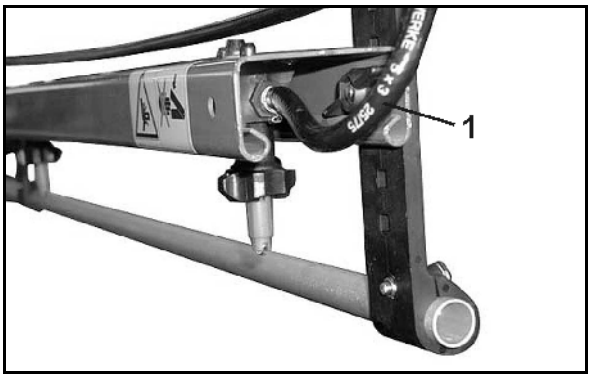

Fig. 89

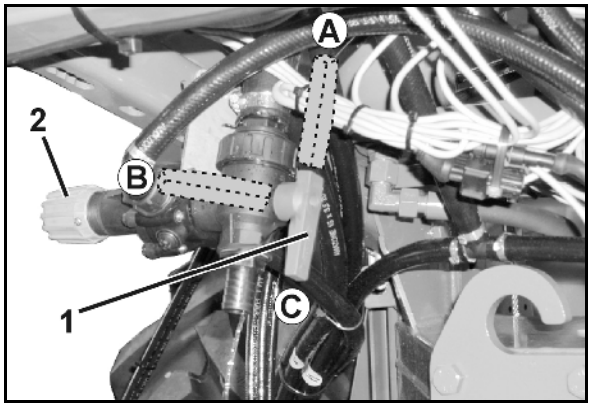

Fig. 90

Overview – pressure circulating system (DUS)

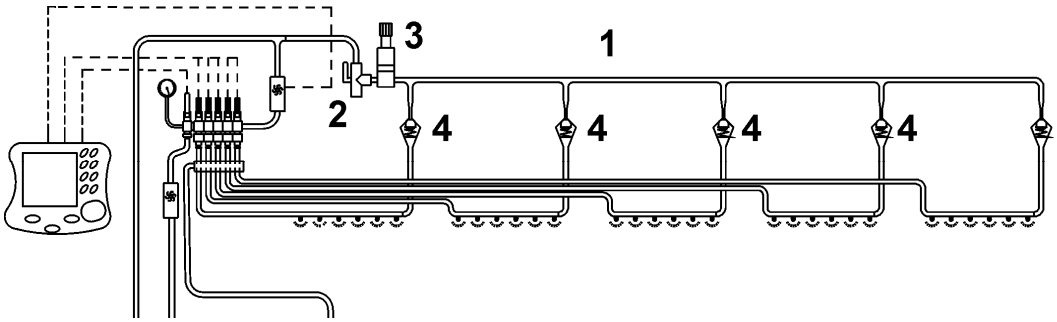

Fig. 91

(1) Pressure circulating system (DUS)

(2) DUS switchover tap

(3) DUS pressure limiting valve

(4) DUS return valve

6.10 Line filter for spray lines (optional)

Line filters (Fig. 92/1) are

- fitted in the spray lines in each part width section.
- an additional measure to avoid contamination of the spraying nozzles.

Overview of the filter inserts

- Filter insert with 50 mesh/inch (series, blue)
- Filter insert with 80 mesh/inch (grey)
- Filter insert with 100 mesh/inch (red)

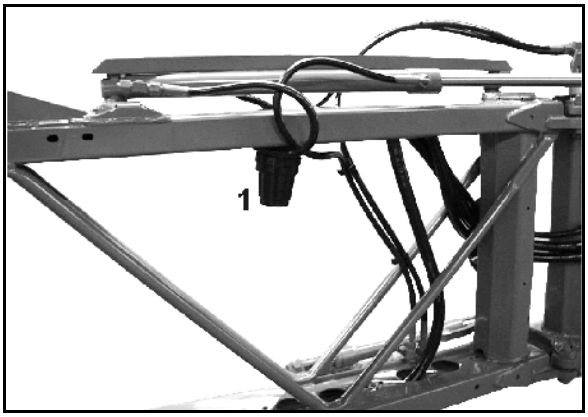

Fig. 92

7 Commissioning

This section contains information

- on commissioning your machine.
- on checking if it is possible to connect the machine to your tractor.

- Before operating the machine for the first time the operator must have read and understood the operating manual.
- Comply with the section "Safety information for the user", starting on page 27 when
  - coupling and uncoupling the machine
  - transporting the machine
  - using the machine
- Only couple and transport the machine to a tractor which is suitable for the task.
- The tractor and machine must meet the national road traffic regulations.
- The operator and the user shall be responsible for compliance with the statutory road traffic regulations.

WARNING

Risk of crushing, shearing, cutting, and being drawn in or trapped in the vicinity of hydraulically or electrically actuated components.

Do not block the operator controls on the tractor which are used for hydraulic and electrical movements of components, e.g. folding, swivelling and pushing movements. The movement must stop automatically when you release the appropriate control. This does not apply to equipment movements that:

- are continuous or
- are automatically locked or
- due to their function require a float position or pressure position.

7.1 Checking the suitability of the tractor

WARNING

Risk of breaking during operation, insufficient stability and insufficient tractor steering and braking power from improper use of the tractor.

- Check the suitability of your tractor, before connecting the machine to the tractor.

  You may only connect the machine to tractors suitable for the purpose.

- Carry out a brake test to check whether the tractor achieves the required braking rate with the machine connected.

Requirements for the suitability of a tractor are, in particular:

- Permissible total weight
- Permissible approved axle loads
- Permissible drawbar load at the tractor coupling point
- Load capacity of the tyres fitted
- The approved trailer load must be sufficient

  You can find this data on the rating plate or in the vehicle documentation and in the tractor operating manual.

The front axle of the tractor must always be subjected to at least 20% of the dead-weight of the tractor.

The tractor must achieve the brake rate specified by the tractor manufacturer, even with the machine connected.

7.1.1 Calculating the actual values for the total tractor weight, tractor axle loads and tyre load capacities, as well as the minimum ballast

The permissible total tractor weight, specified in the vehicle documentation, must be greater than the sum of the

- Tractor empty weight,
- Ballast weight and
- Total weight of the connected machine or drawbar load of the connected machine

This information is only valid for the Federal Republic of Germany:

If, having tried all possible alternatives, it is not possible to comply with the axle loads and / or the permissible total weight, then a survey by an officially-recognised motor vehicle traffic expert can, with the approval of the tractor manufacturer, be used as a basis for the authority responsible to issue an exceptional approval according to § 70 of the German Regulations Authorising the Use of Vehicles for Road Traffic and the required approval according to § 29, paragraph 3 of the German Road Traffic Regulations.

7.1.1.1 Data required for the calculation

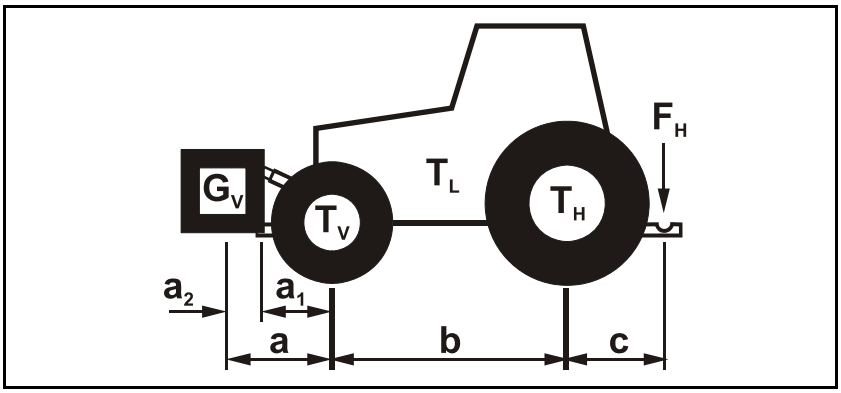

Fig. 93

T_L	[kg]	Tractor empty weight	See tractor operating manual or vehicle documentation
T_V	[kg]	Front axle load of the empty tractor	
T_H	[kg]	Rear axle load of the empty tractor	
G_V	[kg]	Front weight (if available)	See front weight in technical data, or weigh
F_H	[kg]	Maximum drawbar load	See technical data of machine
a	[m]	Distance between the centre of gravity of the front machine mounting or the front ballast and the centre of the front axle (total $a_1 + a_2$)	See technical data of tractor and front machine mounting or front ballast or measurement
a_1	[m]	Distance from the centre of the front axle to the centre of the lower link connection	See tractor operating manual or measurement
a_2	[m]	Distance between the centre of the lower link connection point and the centre of gravity of the front machine mount or front ballast (centre of gravity distance)	See technical data of front machine mounting or front ballast or measurement
b	[m]	Tractor wheel base	See tractor operating manual or vehicle documents or measurement
c	[m]	Distance between the centre of the rear axle and the centre of the lower link connection	See tractor operating manual or vehicle documents or measurement

7.1.1.2 Calculation of the required minimum ballasting at the front $G_{V\ min}$ of the tractor for assurance of the steering capability

$$G_{V\ \min} = \frac{F_H \bullet c - T_V \bullet b + 0{,}2 \bullet T_L \bullet b}{a + b}$$

Enter the numeric value for the calculated minimum ballast $G_{V\ min}$, required on the front side of the tractor, in the table (Section 7.1.1.7).

7.1.1.3 Calculation of the actual front axle load of the tractor $T_{V\ tat}$

$$T_{V\ tat} = \frac{G_V \bullet (a + b) + T_V \bullet b - F_H \bullet c}{b}$$

Enter the numeric value for the calculated actual front axle load and the approved tractor front axle load specified in the tractor operating manual in the table (Section 7.1.1.7).

7.1.1.4 Calculation of the actual total weight of the combined tractor and machine

$$G_{tat} = G_V + T_L + F_H$$

Enter the numeric value for the calculated actual total weight and the approved total tractor weight specified in the tractor operating manual in the table (Section 7.1.1.7).

7.1.1.5 Calculation of the actual rear axle load of the tractor $T_{H\ tat}$

$$T_{H\ tat} = G_{tat} - T_{V\ tat}$$

Enter the numeric value for the calculated actual rear axle load and the approved tractor rear axle load specified in the tractor operating manual in the table (Section 7.1.1.7).

7.1.1.6 Tyre load capacity

Enter the double value (two tyres) of the approved load capacity (see, for example, tyre manufacturer's documentation) in the table (Section 7.1.1.7).

7.1.1.7 Table

	Actual value according to calculation		Permissible value according to tractor operating manual		Double the permissible load capacity (two tyres)
Minimum ballast front / rear	/ kg		--		--
Total weight	kg	≤	kg		--
Front axle load	kg	≤	kg	≤	kg
Rear axle load	kg	≤	kg	≤	kg

- You can find the permissible values for the total tractor weight, axle loads and load capacities in the tractor registration papers.
- The actually calculated values must be less than or equal to (≤) the permissible values.

WARNING

Risk of crushing, cutting, being caught or drawn in, or impact through insufficient stability and insufficient tractor steering and brake power.

It is forbidden to couple the machine to the tractor used as the basis for calculation, if

- one of the actual, calculated values is greater than the permissible value.
- there is no front ballast (if required) attached to the tractor for the minimum front ballast ($G_{V\ min}$).

You must use a front weight, which is equal to at least the required minimum front ballast ($G_{V\ min}$).

7.1.2 Requirements for tractor operation with attached machines

WARNING

Risk of breakage during operation of components through unapproved combinations of connecting equipment.

- Ensure:
  - that the connection fitting on the tractor possesses a permissible drawbar load sufficient for the actual drawbar load.
  - that the axle loads and weights of the tractor altered by the drawbar load are within the approved limits. If necessary, weigh them.
  - that the tractor's actual static rear axle weight does not exceed the permissible rear axle weight.
  - that the permissible total weight of the tractor is observed
  - that the approved load capacities of the tractor tyres are not exceeded.

7.1.2.1 Combination options for connection fittings and towing eyes

Fig. 94 shows permitted combination options for joining the connection fitting on the tractor and the towing eye on the machine in relation to the maximum permitted drawbar load.

You will find the maximum permitted drawbar load in the vehicle documentation or on the rating plate on the connection fitting of your tractor.

Maximum permissible drawbar load	Connection fitting on the tractor	Towing eye on the fixed drawbar trailer
2000 kg	Pin coupling DIN 11028 / ISO 6489-2	Towing eye 40 for hydraulic high-lift drawbar DIN 11043
	Non-automatic pin coupling DIN 11025	
3000 kg - ≤ 40 km/h 2000 kg - > 40 km/h	Trailer hook (hitch hook) ISO 6489-1	Towing eye (hitch ring) ISO 5692-1
	Trailer peg (Piton-fix) ISO 6489-4	
	Ball coupling 80	Ball bracket 80

Fig. 94

7.1.2.2 Calculating the actual D_C value for the combination to be coupled

WARNING

Risk of breakage of the connection fitting between tractor and machine due to improper use of the tractor.

Calculate the actual D_C value for your combination, made up of tractor and machine, to check whether the connection fitting on your tractor displays the required D_C value. The actual calculated D_C value for the combination must be less than or equal to (≤) the given D_C value of the connection fitting of your tractor.

The actual D_C value of a coupling combination is calculated as follows:

$$D_C = g \times \frac{T \times C}{T + C}$$

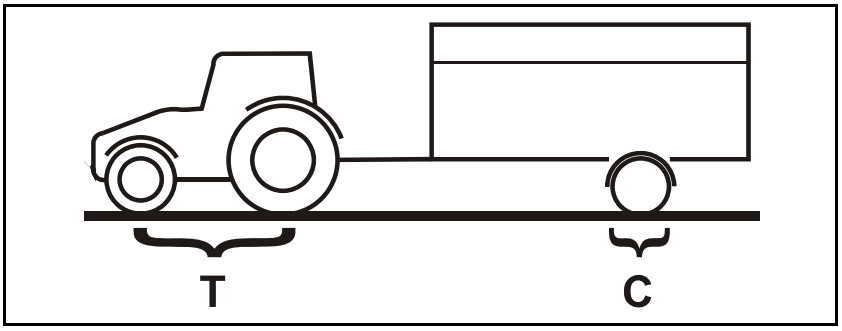

Fig. 95

T: Permissible total weight of your tractor in [t] (see tractor operating manual or vehicle documents)

C: Axle load of the machine loaded with the permitted mass (payload) in [t], without drawbar load

g: Acceleration due to gravity (9.81 m/s²)

Actual calculated D_C value for the combination		**D_C value given on the tractor for the connection fitting**
KN	≤	KN

You can find the D_C value for the connection fitting on the connection fitting itself / in the operating manual for your tractor.

7.1.3 Machines without their own brake system

WARNING

Risk of crushing, cutting, being caught or drawn in, or impact through inadequate brake power of your tractor.

The tractor must achieve the brake rate specified by the tractor manufacturer, even with the machine connected.

If the machine does not possess its own brake system:

- Then the actual tractor weight must be greater than or equal to (≥) the actual weight of the connected machines.

  In many countries, other regulations apply. In Russia, for example, the weight of the tractor must be double that of the attached machine.
- The maximum operational speed is 25 km/h.

7.2 Adjusting the length of the PTO shaft to the tractor

WARNING

Danger from

- **damaged and/or destroyed, flying parts for the operator / third party if the PTO shaft is compressed or pulls apart while the machine coupled to the tractor is being raised/lowered, because the length of the PTO shaft has not been adjusted properly.**
- **being caught and drawn in if the PTO shaft is installed incorrectly or if unauthorised design changes are made.**

Have the length of the PTO shaft checked in all operating positions by a specialist workshop and, if necessary, adjusted before coupling the PTO shaft to your tractor for the first time.

Always observe the operating manual supplied with the PTO shaft when adjusting the PTO shaft.

This adjustment of the PTO shaft applies only for the current tractor type. You may need to readjust the PTO shaft if you couple the machine to another tractor.

WARNING

Risk of being caught and drawn in if the PTO shaft is installed incorrectly or if unauthorised design changes are made.

Only a specialist workshop may make design changes to the PTO shaft. When doing so, read and follow the operating manual from the manufacturer.

Adjusting the length of the PTO shaft is permitted with consideration of the minimum profile overlap.

Design changes to the PTO shaft that are not described in the operating manual from the PTO shaft manufacturer are not permitted.

WARNING

Risk of crushing between the rear of the tractor and the machine when raising and lowering the machine to determine the shortest and longest operating position of the PTO shaft.

Only actuate the operator controls for the tractor's three-point linkage

- from the intended workstation.
- if you are outside of the danger area between the tractor and the machine.

WARNING

Risk of crushing from unintentional:

- **rolling of the tractor and the connected machine.**
- **lowering of the raised machine.**

Secure the tractor and machine from unintentionally starting or rolling and secure the raised machine against unintentional lowering before entering the danger zone between the tractor and raised machine in order to adjust the PTO shaft.

The PTO shaft is at its shortest when it is horizontal. The PTO shaft is at its longest when the machine is fully lifted.

1. Couple the tractor to the machine (do not connect the PTO shaft).
2. Apply the tractor's parking brake.
3. Determine the clearance height of the machine with the shortest and longest operating position for the PTO shaft.
   3.1 To do so, raise and lower the machine via the tractor's three-point hydraulic system.
   While doing so, actuate the manual controls for the tractor's three-point hydraulic system on the rear of the tractor, from the provided workstation.
4. Secure the machine, lifted in the measured clearance height, against unintentional lowering (for example, by supporting it or hooking it to a crane).
5. Secure the tractor from unintentional starting before entering the danger area between the tractor and machine.
6. When measuring the length and shortening the PTO shaft, read and follow the operating manual from the PTO shaft manufacturer.
7. Put the shortened halves of the PTO shaft back together.
8. Grease the universal joint shaft of the tractor and the gearbox input shaft before connecting the PTO shaft.
   The tractor symbol on the protective tube of the PTO shaft identifies the tractor-side connection of the PTO shaft.

7.3 Securing tractor / machine against accidental starting and rolling

WARNING

Risk of crushing, shearing, cutting, being caught and/or drawn in, or impact when making interventions in the machine, through

- **unintentional falling of the unsecured machine raised using the tractor's three-point linkage.**
- **unintentional falling of raised, unsecured machine parts.**
- **unintentional start-up and rolling of the tractor-machine combination.**
- Secure the tractor and the machine against unintentional start-up and rolling before making any intervention in the machine.
- It is forbidden to make any intervention in the machine, such as installation, adjustment, troubleshooting, cleaning, maintenance and repairs
  - when the machine is running
  - for as long as the tractor engine is running with a connected PTO shaft / hydraulic system.
  - when the ignition key is inserted in the tractor and the tractor engine with the connected PTO shaft / hydraulic system could be started unintentionally.
  - when the tractor and machine are not secured against unintentional rolling using their parking brakes and/or wheel chocks.
  - when moving parts are not locked against unintentional movement.

  When carrying out such work, there is a high risk of contact with unsecured components.

1. Lower the raised, unsecured machine / raised, unsecured parts of the machine.

→ This is how to prevent unintentional falling:

2. Shut down the tractor engine.
3. Remove the ignition key.
4. Apply the tractor's parking brake.
5. Secure the machine against unintentional rolling (only attached machine)
   - On flat ground using the parking brake (if present) or wheel chocks.
   - On uneven ground or slopes using the parking brake and wheel chocks.

7.4 Fitting wheels (Specialist workshop)

If the machine is fitted with inflatable spare tyres, running wheels must be fitted before putting into operation.

WARNING

Only one permitted set of tyres may be used, as specified in the technical data (see page 49).

Wheel rims that are suitable for the tyres used must have a rim that has been fully welded all the way round.

1. Lift machine slightly using lifting crane.

DANGER

Use the attachment points marked for lifting belts.

See also "Loading" section, page 37.

2. Loosen wheel nuts on the inflatable spare tyres.
3. Remove inflatable spare tyres.

CAUTION

Take care when removing the inflatable spare tyres and putting the running wheels in place.

4. Place the running wheels on threaded bolts.
5. Tighten wheel nuts.

Required tightening torque for wheel nuts: 510 Nm.

6. Lower machine and remove lifting belts.
7. After 10 operating hours, tighten wheel nuts.

7.5 Initial operation of service brake system

Perform a brake test while the trailed sprayer is empty, and again when it is loaded to test the braking behaviour of the tractor with coupled trailed sprayer.

We recommend that you have a specialist workshop coordinate the brakes on the tractor and trailed sprayer in order to attain optimum braking and minimum wear to brake linings (see "Maintenance" section, page 183).

7.6 Adjusting the system setting screw on the hydraulic block

- **Profi-folding only:**

> The machine is not suitable for use with the 'Load Sensing' hydraulic system.

> Always adjust the system setting screw to the hydraulic system on your tractor. Increased hydraulic fluid temperatures are the result of an incorrectly adjusted system setting screw, caused by constant strain on the tractor hydraulics pressure relief valve.

Fig. 96/...

(1) System converting bolt

(2) LS connection for load sensing control line

Fig. 97/...

(1) Tractor connection for load sensing control line

(2) Tractor connection for the load sensing pressure hose

(3) Tractor connection for the pressure-free return flow

The tractor hydraulic system available determines the setting of the system setting screw on the hydraulic block (Fig. 96/1).

Depending on the tractor hydraulic system, the system setting screw must be

- **screwed out** up to the stop (factory setting) on tractors with
  - open-centre hydraulic system (constant flow system, geared pump hydraulics).
  - setting pump with adjustable oil extraction via the control unit
- **screwed in** up to the stop (in contrast to the factory setting) on tractors with
  - closed-centre hydraulic system (constant pressure system, pressure regulated setting pump).
  - load-sensing hydraulic system (pressure and power controlled setting pump) with direct load-sensing pump connection. Using the flow control valve on the tractor, adjust the actual flow rate to the required flow rate.

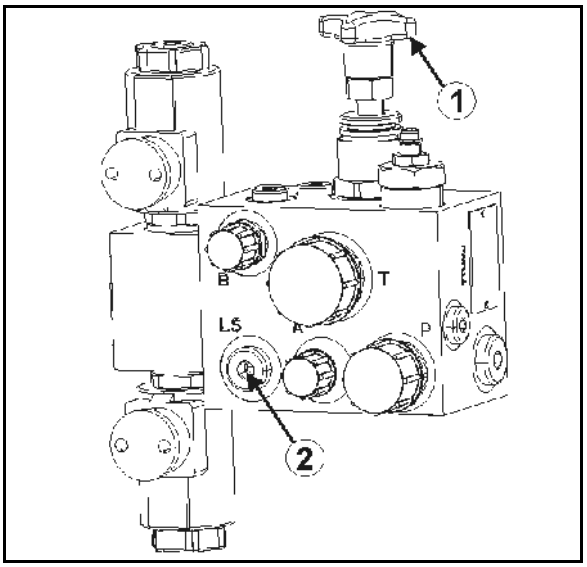

Fig. 96

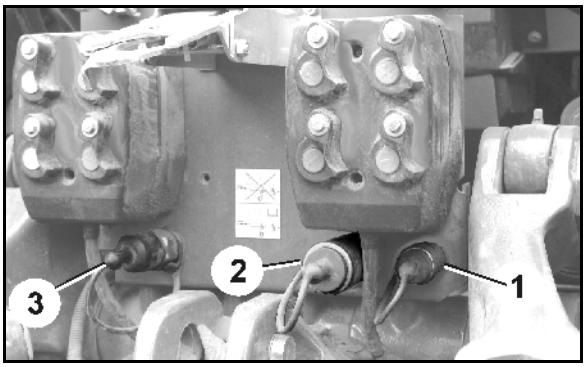

Fig. 97

> - The machine must be depressurised before making adjustments.
> - The hydraulic block can be found at the front on the right of the machine, behind the cover plate.

7.7 Trail-Tron position encoder

If using Trail-Tron drawbar, a holder for the position encoder (Fig. 98/1) must be fitted to the tractor.

The holder must be made according to the actual circumstances of the tractor with the sleeve with locking screw (Fig. 98/2) and metal plate (Fig. 98/3) provided.

When installed, the position encoder must be directly above the pivot point of the tractor pin coupling (Fig. 98/4).

- Keep the distance between the coupling point and position encoder (Fig. 99/ X) as small as possible (particularly with the hitch drawbar).
- In neutral position with the machine coupled, the rod of the position encoder must be pulled approximately 100 mm out of the holder.

  If necessary, fasten the holder in an alternative position.

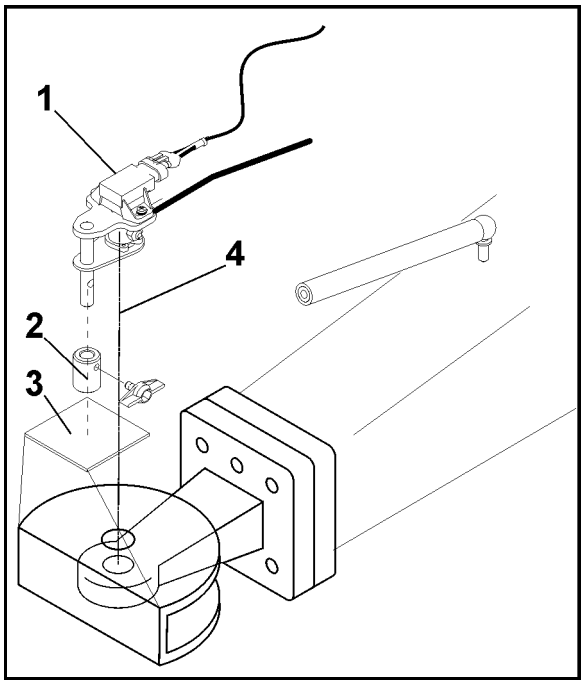

Fig. 98

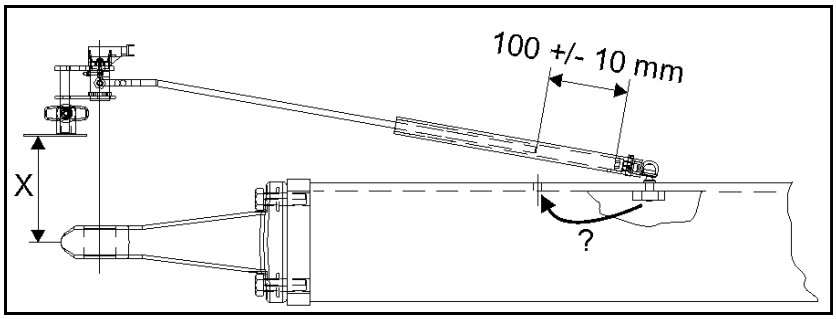

Fig. 99

7.8 Track setting (Specialist workshop)

Set the wheelmark spacing of the machine so that the wheels of the sprayer run in the middle of the **tractor** wheel tracks.

The wheelmark spacing (for 9.5 R 44 tyres) is steplessly adjustable from 1,500 mm to 2,250 mm.

The adjustable wheelmark spacings depend on the wheel installation:

- Stepless from 1,500 mm to 1,960 mm for wheel installation as per position 1 (Fig. 100).
- Stepless from 1,700 mm to 2,250 mm for wheel installation as per position 2 (Fig. 100).

Tighten the wheel bolts to tightening torque 450 Nm.

Carry out wheelmark spacing adjustment as follows:

1. Attach the sprayer to the **tractor**.
2. Apply the **tractor's** parking brake.
3. Secure the sprayer against rolling away with chocks.
4. Raise the sprayer on one side with a jack until the respective wheel is raised from the ground.

Warning!

Position the jack on the sprayer frame, not on the axle!

5. Release the clamping screws (Fig. 100/1).
6. Extend or retract the axle half to the desired position. For this purpose, determine dimension "x" from the outer edge of the base frame (Fig. 84/1) to the centre of the sprayer wheel and extend or retract the axle half accordingly..

$$X = \frac{\text{Desired wheelmark spacing [mm]} - 1.200\ \text{[mm]}}{2}$$

7. Tighten the clamping screws to tightening torque **410 Nm** for M 20 screws.
8. Extend or retract the axle half on the opposite side in the same way.

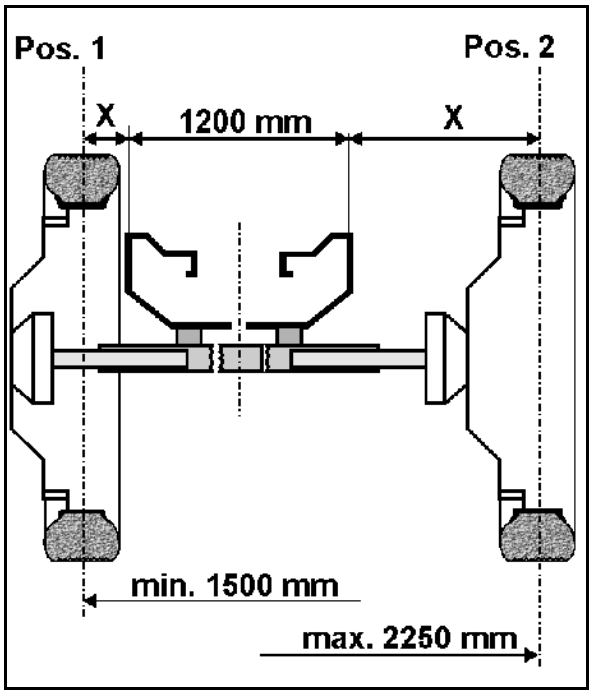

Fig. 100

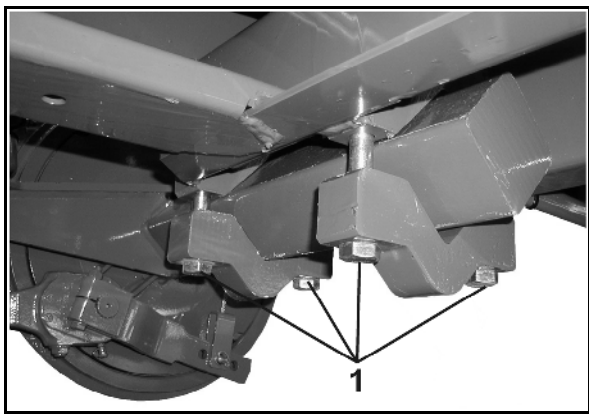

Fig. 101

7.9 Adjusting the steering geometry for track follow drawbar or universal drawbar to the tractor (Specialist workshop)

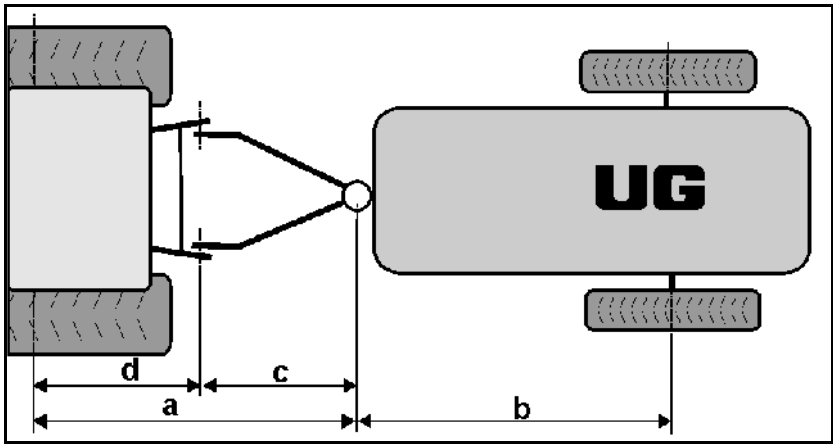

Fig. 102

(a) Distance between the tractor's rear axle and the pivot point of the drawbar:

(b) Distance between the machine's axle and the pivot point of the drawbar.

(c) Distance between the pivot point and lower link connection of the drawbar..

(d) Distance between the centre of the tractor's rear axle and the tractor's lower link connection.

Exact as possible track follow-up of the sprayer behind the tractor is achieved if the pivot point of the drawbar is exactly in the centre between the tractor's rear axle (Fig. 102/2) and the machine's axle.

→ a = b

For this purpose, the distance **"c"** between the pivot point and the lower link connections is adjustable as follows:

- with the track follow drawbar from 1020 to 1260 mm (4 x in steps of 80 mm).
- with the universal drawbar from 1100 to 1260 mm (3 x in steps of 80 mm).

Adjust the steering geometry of a non-installed machine placed on the stand as follows:

1. Determine the dimension **"c"** to be set between the pivot point and the lower link connection of the drawbar:

→ c = a - d

2. Release and remove the securing screws.
3. Screw on the lower link arms or drawbar as per distance **c**.
4. Tighten the securing screws to tightening torque:

- 360 Nm with M 20 **screws**,
- 450 Nm with M 22 **screws**.

8 Coupling and uncoupling the machine

When coupling and decoupling the machine, comply with the section "Safety information for the user", page 27.

WARNING

Risk of crushing from unintentional starting and rolling of the tractor and machine when coupling or uncoupling the machine.

When coupling or decoupling the machine, secure the tractor and machine against unintentional start-up and rolling before entering the danger area between the tractor and machine; refer to page 124.

WARNING

Risk of crushing between the rear of the tractor and the machine when coupling and uncoupling the machine.

Only actuate the operator controls for the tractor's three-point linkage

- from the intended workstation.
- if you are outside of the danger area between the tractor and the machine.

8.1 Coupling the machine

WARNING

Risk of breaking during operation, insufficient stability and insufficient tractor steering and braking power from improper use of the tractor.

You may only connect the machine to tractors suitable for this purpose. Refer to the section "Checking the suitability of the tractor", page 116.

WARNING

Risk of crushing when coupling the machine and standing between the tractor and the machine.

Instruct people to leave the danger area between the tractor and the machine before you approach the machine.

Any helpers may only act as guides standing next to the tractor and the machine, and may only move between the vehicles when both are at a standstill.

WARNING

Risk of contusions, cutting, catching, drawing in and knocks when the machine unexpectedly releases from the tractor!

- Use the intended equipment to connect the tractor and the machine in the proper way.
- When coupling the machine to the tractor's three-point hydraulic system, ensure that the attachment categories of the tractor and the machine are the same.
  You must upgrade the machine's cat. II upper and lower links to cat. III with the aid of adapter sleeves if your tractor has a cat. III three-point hydraulic system.
- Only use the upper and lower link pins provided for coupling the machine.
- Check the upper and lower link pins for visible defects whenever the machine is coupled. Replace the upper and lower link pins in the event of clearly visible wear.
- Secure the upper link pin and lower link pin in the attachment points of the three-point attachment frame against unintentional detachment using a linchpin.
- Perform a visual inspection to ensure that the upper and lower link hooks are correctly locked before reversing the tractor.

WARNING

Risk of energy supply failure between the tractor and the machine due to damaged power supply lines.

During coupling, check the course of the power supply lines. The power supply lines

- must give slightly to all movement of the connected machine without tensioning, kinking or rubbing.
- must not chafe against other parts.

CAUTION

Lower link hitch:
Damage to the PTO shaft when braking suddenly after driving in reverse because the machine bangs up.

Secure the lower link connection upwards to prevent a release.

1. Direct people away from the danger area between the tractor and machine before you approach the machine with the tractor.
2. Couple the supply lines first before coupling the machine with the tractor.
   - 2.1 Drive the tractor up to the machine, leaving a clearance of approximately 25 cm between tractor and machine.
   - 2.2 Secure the tractor against unintentional starting and unintentional rolling.
   - 2.3 Check whether the universal joint shaft of the tractor is switched off.
   - 2.4 Couple the PTO shaft and supply lines with the tractor.
   - 2.5 Hydraulic brake: fasten the parking brake pulling cable to the tractor.
3. Now reverse the tractor towards the machine so that the connection fitting can be coupled.
4. Couple the connection fitting.
5. Lift the stand into transport position.
6. Remove wheel chocks, release parking brake.

When driving the tractor with the machine coupled round a curve for the first time, make sure that no tractor attachments collide with the machine:

8.2 Uncoupling the machine

WARNING

Risk of crushing, cutting, being caught or drawn in, or impact through inadequate stability and tipping over of the uncoupled machine.

Park the empty machine on a horizontal space with a hard surface.

When uncoupling the machine, there must always be enough space in front of the machine so that you can align the tractor with the machine if necessary.

1. Park the empty machine on a horizontal space with a hard surface.
2. Uncouple the machine from the tractor.
   - 2.1 Secure the machine against unintentionally rolling. See page 124.
   - 2.1 Lower the stand to the parking position.
   - 2.2 **Un**couple the connection fitting.
   - 2.3 Draw the tractor forwards by approximately 25 cm.
   - → The space created between the tractor and the machine allows better access for decoupling the PTO shaft and the power supply lines.
   - 2.4 Secure the tractor and machine against unintentional starting and unintentional rolling.
   - 2.5 Decouple the PTO shaft.
   - 2.6 Place the PTO shaft in the holder.
   - 2.7 Uncouple the supply lines.
   - 2.8 Fasten the supply lines in the corresponding parking sockets.
   - 2.9 Hydraulic brake: detach parking brake pulling cable from tractor.

8.2.1 Manoeuvring the uncoupled machine

DANGER

You must be particularly careful when shunting the machine with the service brake system released, since only the manoeuvring vehicle is now braking the trailed sprayer.

The machine must be connected to the manoeuvring vehicle before you actuate the release valve on the trailer brake valve.

The manoeuvring vehicle must be braked.

The service brake system cannot be released using the release valve if the air pressure in the air reservoir drops below 3 bar (e.g. if the release valve has been actuated multiple times or if there are leaks in the brake system).

To release the service brake

- fill the air reservoir.
- Remove all air from the braking system at the drain valve on the air reservoir.

1. Connect the machine to the manoeuvring vehicle.
2. Brake the manoeuvring vehicle.
3. Remove the wheel chocks and release the parking brake.
4. **pneumatic braking system** only:

   4.1 Press the actuator button on the release valve as far as it will go (see page 64).

→ The service brake system is released and the machine can be manoeuvred.

   4.2 Once the manoeuvring procedure is finished, pull out the actuator button on the release valve as far as it will go.

→ The pressure from the air reservoir brakes the trailed sprayer again.

5. Actuate the brakes on the manoeuvring vehicle again once you have finished manoeuvring the machine.
6. Tighten the parking brake again and secure the machine against rolling with wheel chocks.
7. Uncouple the machine and manoeuvring vehicle.

9 Transportation

- During transportation, follow the instructions given in the section "Safety instructions for the operator", page 29.
- Before moving off, check:
  - that the supply lines are connected correctly.
  - the lighting system for damage, proper operation and cleanliness,
  - the braking and hydraulic systems for obvious defects.
  - that the parking brake is completely released
  - the function of the brake system

WARNING

Risk of crushing, shearing, cutting, being caught and/or drawn in, or impact when making interventions in the machine, through unintentional machine movements.

- On foldable machines, check that the transport locks are correctly locked.
- Secure the machine against unintentional movements before starting transportation.

WARNING

Risk of crushing, cutting, being caught and/or drawn in, or impact from tipping and insufficient stability.

- Drive in such a way that you always have full control over the tractor with the attached machine.

  In so doing, take your personal abilities into account, as well as the road, traffic, visibility and weather conditions, the driving characteristics of the tractor and the connected machine.
- Before transportation, fasten the side locking device of the tractor lower link, so that the connected or coupled machine cannot swing back and forth.

WARNING

Risk of breaking during operation, insufficient stability and insufficient tractor steering and braking power from improper use of the tractor.

These risks pose serious injuries or death.

Comply with the maximum load of the connected machine and the permissible axle and drawbar loads of the tractor. If necessary, drive only with a partially filled tank.

WARNING

Risk of falling when riding on the machine, contrary to instructions.

It is forbidden to ride on the machine and/or climb the machine while it is running.

Instruct people to leave the loading site before approaching the machine.

CAUTION

- During transportation, follow the instructions given in the section "Safety instructions for the operator", page 29.
- Transportation while Trail-Tron is switched on is prohibited.
- Transportation is prohibited with a locked control unit. As a general rule, put the control unit on the tractor into neutral for transportation.
- Use transport locking for locking the folded-in sprayer boom in its transport position to prevent it from folding out unintentionally
- Use the transport safety catch to secure the induction bowl when it has been swivelled up into its transport position to prevent it from swivelling down again accidentally.
- Securing elements engage in the catching hooks and secure the ladder in the transport position against unintentional lowering.
- If a boom extension (option) is mounted, move it into the transport position.
- Switch the work lights off during transport to avoid blinding other motorists.

WARNING

Risk of accident from the machine tipping over or unstable machine driving behaviour!

- Set the steering drawbar to central position (drawbar flush with machine longitudinal axis).
- Secure steering drawbar by closing the stop tap in position **0**.
- Attach the universal drawbar by securing the fixing bar / the hydraulic cylinder between the machine and drawbar.

Otherwise there is the risk of the machine tipping over!

10 Using the machine

When using the machine, observe the information in the following sections:

- "Warning symbols and other labels on the machine" starting on page 18 and
- "Safety information for the user", starting on page 27 ff.

Observing this information is important for your safety.

WARNING

Risk of breaking during operation, insufficient stability and insufficient tractor steering and braking power from improper use of the tractor.

Comply with the maximum load of the connected machine and the permissible axle and drawbar loads of the tractor. If necessary, drive only with a partially filled tank.

WARNING

Risk of crushing, cutting, being caught and/or drawn in, or impact through insufficient stability and tipping of the tractor and/or the attached machine.

Drive in such a way that you always have full control over the tractor, whether the machine is attached or unattached.

In so doing, take your personal abilities into account, as well as the road, traffic, visibility and weather conditions, the driving characteristics of the tractor and the connected machine.

WARNING

Risk of crushing, shearing, cutting, being caught and/or drawn in, or impact through

- **unintentional falling of raised, unsecured machine parts.**
- **unintentional start-up and rolling of the tractor-machine combination.**

Secure the tractor and the machine against unintentional start-up and rolling before eliminating faults on the machine. See page 124.

Wait for the machine to stop before entering the machine danger area.

WARNING

Danger for the operator or third parties from damaged components being ejected due to impermissibly high drive speeds of the tractor universal joint shaft.

Observe the permissible machine drive speed before switching on the tractor universal joint shaft.

WARNING

Risk of being caught and drawn in and danger from foreign objects being caught and thrown out in the danger area of the driven PTO shaft.

- Whenever the machine is used, first check to ensure that the safety devices and guards of the PTO shaft are fully intact and functional.

  Have damaged safety devices and guards of the PTO shaft replaced immediately by a specialist workshop.
- Check that the PTO shaft guard is secured against rotation by the supporting chain.
- Maintain a sufficient safety clearance between you and the driven PTO shaft.
- Direct people out of the danger area of the driven PTO shaft.
- Shut down the tractor engine immediately in case of danger.

WARNING

Risk of accidental contact with crop protection agents / spray liquid.

- Wear personal protective equipment
  - when preparing the spray liquid.
  - when cleaning / replacing the spraying nozzles during spraying operation.
  - for all cleaning work carried out on the field sprayer after spraying operation.
- When wearing the required protective clothing, always observe the manufacturer's instructions, the product information, the user manual, the safety datasheet or the operating manual for the crop protection agent to be used. For example, use:
  - Chemical-resistant gloves
  - Chemical-resistant overalls
  - Water-resistant footwear
  - A face mask
  - Breathing apparatus
  - Safety glasses
  - Skin protection agents, etc.

WARNING

Risk to health from accidental contact with crop protection agents or spray liquid.

- Put on protective gloves before
  - using crop protection agent,
  - carrying out work on a contaminated field sprayer or
  - cleaning the field sprayer.
- Wash the gloves with clear fresh water from the fresh water tank
  - immediately after contact with crop protection agent.
  - before removing the gloves.

- To use Trail-Tron, open the stop tap on the hydraulic cylinder.

10.1 Preparing for spraying operation

- The field sprayer must be operating properly in order to guarantee correct application of the crop protection agent. Have the field sprayer tested regularly on a test rig. Rectify any deficiencies immediately.
- Make sure of using the correct filter equipment, see page 86
- Clean the field sprayer thoroughly before spreading a different crop protection agent.
- Flush the nozzle line before:
  - each time changing a nozzle.
  - before rotating the multiple-nozzle head to another nozzle.

  See the section on "Cleaning", page 175
- Fill the flushing water tank and the clear water tank.

10.2 Preparing the spray liquid

WARNING

Risk of accidental contact with crop protection agent and/or spray liquid.

- Always induct the crop protection agent into the spray liquid tank using the induction bowl.
- Swivel the induction bowl into the filling position before pouring in crop protection agent.
- Observe the safety regulations on physical protective equipment and breathing apparatus for use when handling crop protection agent and preparing the spray liquid, in the instructions for use of the crop protection agent.
- Do not prepare the spray liquid in the vicinity of wells or surface water.
- Avoid leaks and contamination with crop protection agent and/or spray liquid through appropriate conduct and wearing appropriate physical protection equipment.
- To avert risks to third parties, do not leave the prepared spray liquid, unused crop protection agent or used crop protection agent canisters and the uncleaned field sprayer unattended.
- Protect contaminated crop protection agent canisters and the contaminated field sprayer from precipitation.
- During and after preparing the spray liquid, ensure sufficient cleanliness in order that risks may be kept as low as possible (e.g. thoroughly wash used gloves before removing them and dispose of the washing water and cleaning fluid in the proper manner).

- The prescribed water and agent spray rate can be found in the directions for use for the crop protection agent.
- Read the directions for use for the agents and observe the specified precautions.

WARNING

Danger for people and animals from accidental contact with spray liquid while filling of the spray liquid tank is underway.

- Wear personal protective equipment when handling crop protection agent / dumping spray liquid from the spray liquid tank. The type of personal protective equipment required depends on the manufacturer's instructions, the product information, the directions for use, the safety datasheet or the user manual for the crop protection agent in question.
- Never leave the field sprayer unattended during filling.
  - Never fill the spray liquid tank beyond the nominal volume.
  - When filling the spray liquid tank, never exceed the permissible load of the field sprayer. Pay attention to the respective specific weight of the liquid in question.
  - During filling, always watch the fill level indicator to avoid overfilling the spray liquid tank.
  - Pay particular attention while filling the spray liquid tank to sealed surfaces; no spray liquid may be allowed to get into the sewerage system.
- Before each filling, check the field sprayer for damage, e.g. for leaking tanks and hoses, as well as for the correct positioning of all control elements.

During filling, pay attention to the permissible load capacity for your field sprayer. Always take into account, when filling your field sprayer, the differing specific weights [kg/l] for individual liquids.

Specific weights of different liquids

Liquid	Water	Urea	UAN	NP solution
Density [kg/l]	**1**	**1.11**	**1.28**	**1.38**

AMATRON+:

Call up the fill indicator from the Work menu in the **AMATRON+**.

- As it is difficult to dispose of residues in an environmentally-friendly manner, carefully calculate the required filling quantity or re-fill quantity to avoid leaving any residue at the end of spraying operation.
  - To calculate the required re-fill quantity for topping up the spray liquid tank, use the "Filling table for remaining spray area". To do this, subtract the technical, undiluted residue in the sprayer boom from the calculated re-fill quantity.

    Refer to the section "Filling table for remaining areas" page146.

Method

1. Determine the required water and agent spray rate by consulting the directions for use of the crop protection agent.
2. Calculate the filling quantity or refill quantity for the area to be treated.
3. Fill the machine and blend in the agent.
4. Agitate the spray liquid before commencing spraying operations in accordance with the instructions of the spraying agent manufacturer.

Fill the machine preferably using a suction hose and blend in the agent while filling.

The induction area is thereby flushed with water constantly.

- During the filling process, start blending in the agent once the tank filling level has reached more than 20%.
- When using more than one agent:
  - Clean the canister immediately after each induction of an agent.
  - Flush the induction port after each induction of an agent.

- When filling, no foam must escape from the spray liquid tank.

  The addition of a froth-inhibiting agent also prevents the spray liquid tank from frothing over.

The agitators normally remain switched on from the initial filling to the end of the spraying operation. The instructions of the agent manufacturer, however, have priority.

- With the agitator running, feed the water-soluble plastic film bag directly into the spray liquid tank.
- Before spraying, fully dissolve the urea by circulating the liquid. When dissolving large quantities of urea, the temperature of the spray liquid falls more sharply; the urea consequently dissolves more slowly. The warmer the water, the faster and more completely the urea can dissolve.

- Carefully wash the empty agent canisters, render them unusable, collect and dispose of them in a proper manner. Do not reuse them for other purposes.
- If only spray liquid is available for washing the agent canisters, first use this to carry out preliminary cleaning. Then wash them meticulously when clear fresh water is available, e.g. before preparing the next load for the spray liquid tank or when diluting the residue from the last load.
- Carefully wash out the empty agent tank (e.g. using canister flushing) and add the flushing water to the spray liquid!

10.2.1 Calculating the filling and re-fill quantity

To calculate the required re-fill quantity for final filling of the spray liquid tank use the "Filling table for remaining spray area", page 146.

Example 1:

The following are given:

Tank nominal volume	3000 l
Residue in the tank	0 l
Water consumption	400 l/ha
Agent required per ha	
Agent A	1.5 kg
Agent B	1.0 l

Question:

How many litres of water, how many kg of Agent A and how many litres of Agent B must be used to treat a surface of 2.5 ha in area?

Answer:

Water:	400 l/ha	x	2.5 ha	=	1000 l
Agent A	1.5 kg/ha	x	2.5 ha	=	3.75 kg
Agent B	1.0 l/ha	x	2.5 ha	=	2.5 l

Example 2:

The following are given:

Tank nominal volume	3000 l
Residue in the tank	200 l
Water consumption	500 l/ha
Recommended concentration	0.15 %

Question 1:

How many litres or kg of agent are needed to fill the tank?

Question 2:

How large is the area to be treated in ha if a residue of 20 l remains in the tank after spraying?

Formula and answer to Question 1:

$$\frac{\text{Refill amount of water [l] x Concentration [\%]}}{100} = \text{Addition of agent[l or kg]}$$

$$\frac{(3000 - 200)\ [l] \times 0.15\ [\%]}{100} = 4.2\ [l \text{ or } kg]$$

Formula and answer to Question 2:

$$\frac{\text{Quantity of liquid available [l] – Residue [l]}}{\text{Water consumption [l/ha]}} = \text{Area to be treated [ha]}$$

$$\frac{3000\ [l]\ \text{(tank nominal volume)} - 20\ [l]\ \text{(residue)}}{500\ [l/ha]\ \text{Water consumption}} = 5{,}96\ [ha]$$

10.2.2 Filling table for remaining spray area

To calculate the required re-fill quantity for final filling of the spray liquid tank use the "Filling table for remaining spray area". Deduct the residue in the spray line from the calculated re-fill quantity. See "Spray lines" section, page 104.

The specified re-fill quantities apply for a spray rate of 100 l/ha. For other spray rates, the re-fill quantity increases by a multiple.

Distance travelled [m]	Re-fill quantities [l] for sprayer booms with working widths [m] of													
	15	16	18	20	21	24	27	28	30	32	33	36	39	40
10	2	2	2	2	2	2	3	3	3	3	3	4	4	4
20	3	3	4	4	4	5	5	6	6	6	7	7	8	8
30	5	5	5	6	6	7	8	8	9	10	10	11	11	12
40	6	7	7	8	8	10	11	11	12	13	13	14	15	16
50	8	8	9	10	11	12	14	14	15	16	17	18	19	20
60	9	10	11	12	13	14	16	17	18	19	20	22	23	24
70	11	11	13	14	15	17	19	20	21	22	23	25	27	28
80	12	13	14	16	17	19	22	22	24	26	26	29	30	32
90	14	15	16	18	19	22	24	25	27	29	30	32	34	36
100	15	16	18	20	21	24	27	28	30	32	33	36	38	40
200	30	32	36	40	42	48	54	56	60	64	66	72	74	80
300	45	48	54	60	63	72	81	84	90	96	99	108	114	120
400	60	64	72	80	84	96	108	112	120	128	132	144	152	160
500	75	80	90	100	105	120	135	140	150	160	165	180	190	200

Fig. 103

10.3 Filling with water

WARNING

Danger for people and animals from accidental contact with spray liquid while filling of the spray liquid tank is underway.

- When filling the spray liquid tank using a mains water supply, never allow the filling hose and the contents of the spray liquid tank to come into direct contact. This is the only way to prevent spray liquid from being sucked or pushed into the mains supply.

→ Secure the end of the filling hose at least 10 cm above the filling opening on the spray liquid tank. The free flow which this creates offers the absolute maximum levels of safety against the backflow of spray liquid into the mains water supply.

- Avoid the formation of froth. No froth should escape from the spray liquid tank during filling. A large-cross-section funnel extending down the base of the spray liquid tank is an effective obstacle to the formation of froth.
- Only fill the spray liquid tank using a used filling sieve.

The least dangerous way is to carry out filling at the side of the field from the water tank (where possible making use of the natural lie of the land). Depending on the type of spraying agent used, this type of filling is not permitted in water protection zones. Always enquire with the "low water authority".

10.3.1 Filling the spray liquid tank via the filling opening

1. Determine the precise water filling quantity (refer to the section "Calculating the filling quantity or re-fill quantity", page 144).
2. Open the hinged/screw lid on the filling opening.
3. Fill the spray liquid tank via the filling opening with a "free flow" from the mains water supply.
4. Always pay attention to the fill level indicator during filling.
5. At the latest, you should stop filling the spray liquid tank
   - when the pointer on the fill level indicator reaches the fill limit mark.
   - before the field sprayer's authorised load is exceeded by the quantity of liquid poured in.
6. Close the filling opening properly using the hinged/screw lid.

10.3.2 Filling the spray liquid tank via the suction port on the control terminal

Please observe the relevant instructions when filling the spray liquid tank via the suction hose from public water points (please also see the section "Use of the machine", page 141).

- Always pay attention to the fill level indicator during filling.
- At the latest, you should stop filling the spray liquid tank
  - when the pointer on the fill level indicator reaches the fill limit mark.
  - before the field sprayer's authorised load is exceeded by the quantity of liquid poured in.

Fig. 104/...

1. Connect the suction hose to the filling connection.
2. Place the suction hose in the extraction point.
3. Move switch tap **D** (optional) to the position.
4. Move switch tap **B** to the position.
5. Move switch tap **A** to the position.
6. Run the pump.
7. If the tank is full
   - 7.1 Remove the suction hose from the extraction point so that the pump is able to suck up all remaining liquid in the suction hose.
   - 7.2 Switch tap **A** in position
8. Close the filling opening properly using the hinged/screw lid.

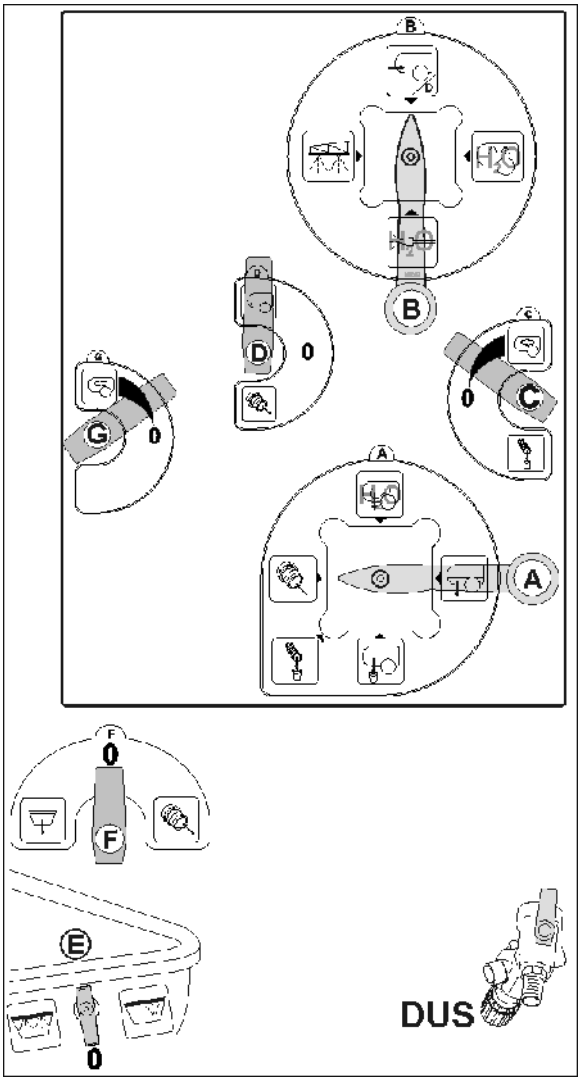

Fig. 104

Increasing the suction power by cutting in the injector:

Switch tap **F** in position .

The injector must not be cut in until the pump has drawn in water.

Comfort equipment with filling stop: The auxiliary injector must not be switched on, otherwise the automatic filling stop will not work.

First of all, place suction chest lever **A** in position then, if the suction hose has not been removed from the water extraction point, uncouple the suction hose from the suction port.

The total suction power is 500 l/min. (Pump 250l/min., injector 250 l/min.).

10.4 Filling the fresh water tank

WARNING

Unauthorised contamination of the fresh water tank with crop protection agent or spray liquid.

Only fill the fresh water tank with clear fresh water, never with crop protection agent or spray liquid.

When using the field sprayer, ensure that there is always an adequate supply of clear fresh water. When filling the spray liquid tank, also check and fill the fresh water tank.

10.5 Inducting agents

DANGER

While inducting agents, wear appropriate protective clothing as prescribed by the crop protection agent manufacturer.

The agitators normally remain switched on from filling to the end of spraying operation. On this account, the instructions of the agent manufacturer are decisive.

With the agitator running, insert the water-soluble plastic film bag straight into the spray liquid tank.

Induct the respective **agent via the induction bowl** (Fig. 105/1) into the water of the spray liquid tank. A distinction is drawn here between the induction of agents in liquid and powder form and of urea.

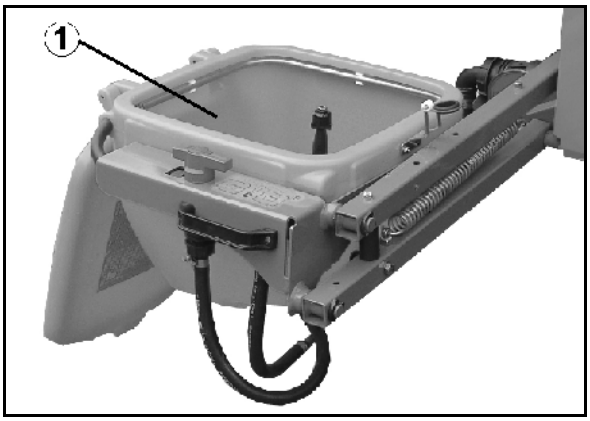

Fig. 105

10.5.1 Inducting liquid agents

Fig. 106/...

1. Fill the spray liquid tank halfway with water.
2. Move switch tap **F** to the position.
3. Move switch tap **E** to the position.
4. Move switch tap **D** (optional) to the position.
5. Move switch tap **B** to the position.
6. Move switch tap **A** to the position.
7. **UG Super**: Switch on agitator **G:**
8. Open the induction bowl lid.
9. Pour the quantity of agent calculated and measured for filling the tank into the induction bowl (max. 60 l).
10. Run the pump at approx. 400 rpm.

→ Fully evacuate the contents from the induction bowl.

11. Move switch tap **E** to position **0**.
12. Move switch tap **F** to position **0**.
13. Close the induction bowl lid.
14. Top up with water.

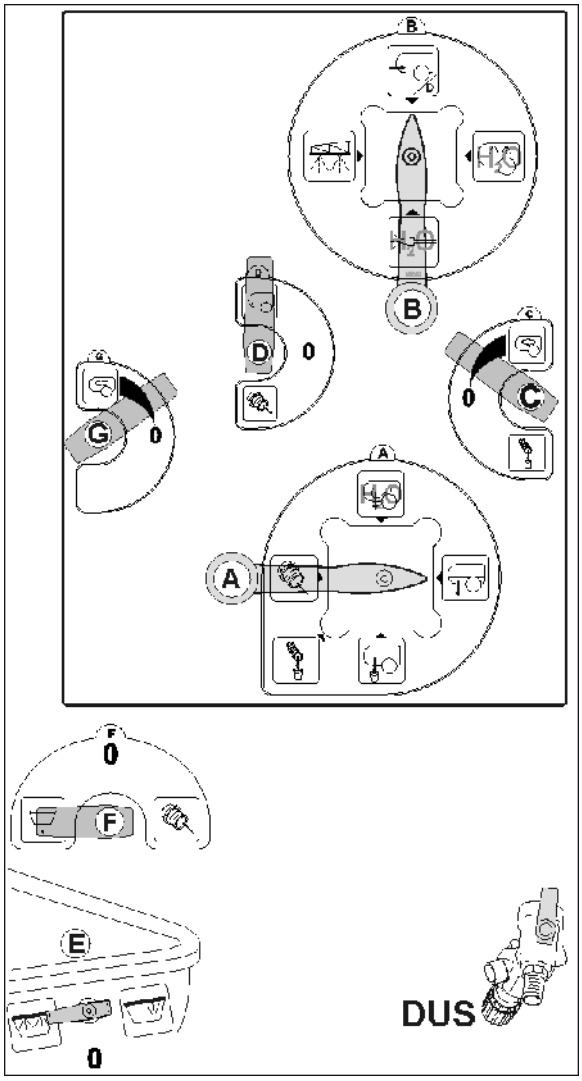

Fig. 106

For simultaneous filling of the spray liquid tank via the suction port on the control terminal:

Move switch tap **A** to the position

10.5.2 Inducting agents in powder form and urea

Before spraying, fully dissolve the urea by circulating liquid. When dissolving large quantities of urea, the temperature of spray liquid will fall more sharply, meaning that the urea will only dissolve slowly. The warmer the water, the faster and more completely the urea will dissolve.

Fig. 107/...

1. Fill the spray liquid tank halfway with water.
2. Move switch tap **F** to position **0**.
3. Move switch tap **E** to position **0**.
4. Move switch tap **D** (optional) to the position.
5. Move switch tap **B** to the position.
6. Move switch tap **A** to the position.
7. **UG Super**: Switch on agitator **G:**
8. Open the induction bowl lid.
9. Pour the quantity of agent or urea calculated and measured for filling the tank into the induction bowl (max. 60 l).
10. Run the pump at approx. 400 rpm.
11. Move switch tap **E** to the position. Pump liquid through the induction bowl, until its contents have fully dissolved.
12. When the agent has fully dissolved, move switch tap **F** to the position until the contents have been fully evacuated from the induction bowl.
13. Move switch tap **E**, **F**, to position **0**.
14. Close the induction bowl lid.
15. Top up with water.

For simultaneous filling of the spray liquid tank via the suction port on the control terminal:

Move switch tap **A** to the position

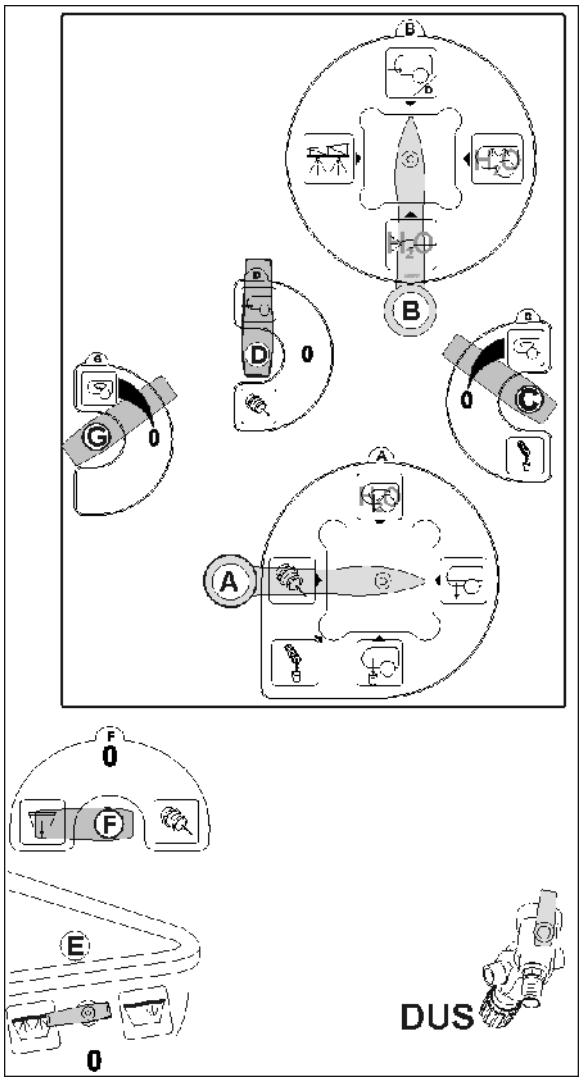

Fig. 107

10.5.3 Preliminary cleaning of the canister using spray liquid

Fig. 108/...

1. Move switch tap **F** to position **0**.
2. Move switch tap **E** to position **0**
3. Move switch tap **D** (optional) to the position.
4. Move switch tap **B** to the position.
5. Move switch tap **A** to the position.
6. Open the induction bowl lid.
7. Run the pump at approx. 400 rpm.
8. Wash the canister or other containers using canister flushing.

   Move switch tap **E** to the position.
9. Press the canister down for at least 30 secs and wash it.
10. Move switch tap **E** to position **0** and remove canister.
11. Move switch tap **F** to the position until the contents have been fully evacuated from the induction bowl.

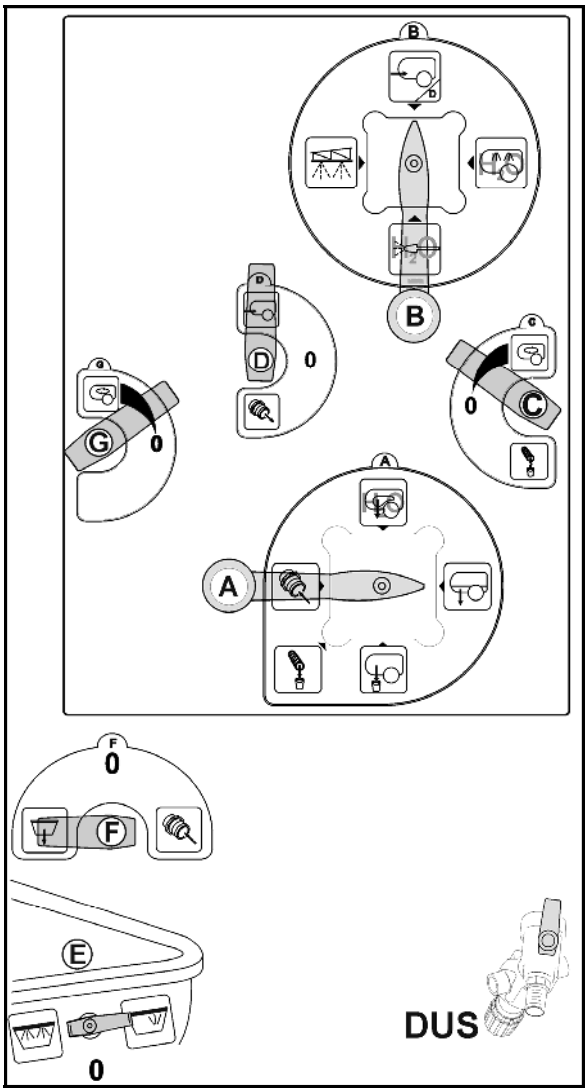

Fig. 108

10.5.4 Cleaning the canister with flushing water

Cleaning the canister with flushing water dilutes the concentration of the spray liquid.

Fig. 109/...

1. Move switch tap **F** to position **0**.
2. Move switch tap **E** to position **0**.
3. Move switch tap **D** (optional) to position **0**.
4. Move switch tap **B** to the position.
5. Move switch tap **A** to the position.
6. **UG Super**: Switch on agitator **G:**
7. Open the induction bowl lid.
8. Run the pump at approx. 400 rpm.
9. Wash the canister or other containers using canister flushing.

   Move switch tap **E** to the position.
10. Press the canister down for at least 30 secs and wash it.
11. Move switch tap **E** to position **0** and remove canister.
12. Move switch tap **A** to the position.
13. Move switch tap **D** to the position.
14. Move switch tap **F** to the position until the contents have been fully evacuated from the induction bowl.

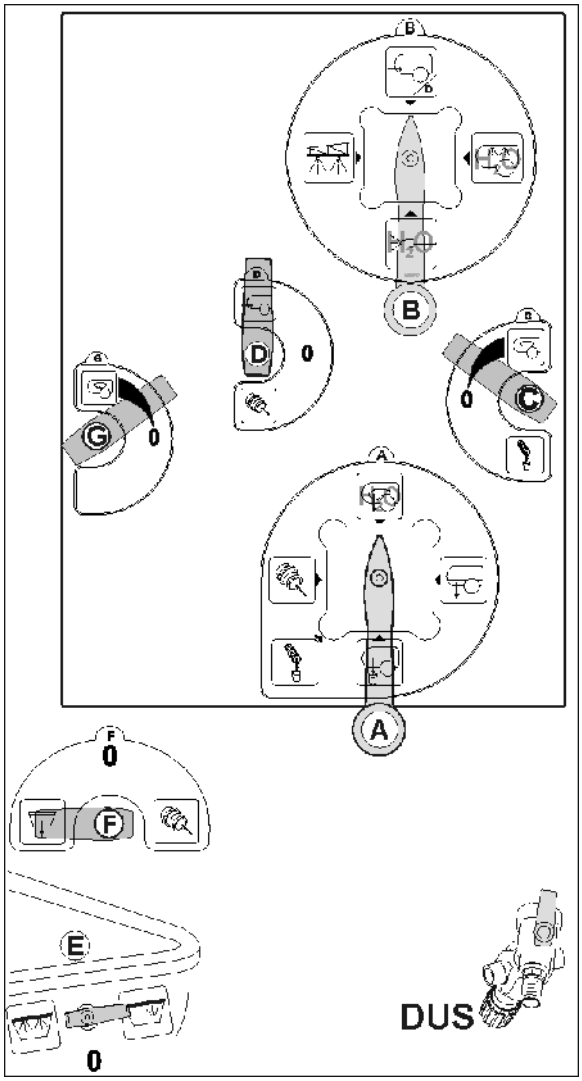

Fig. 109

10.6 Spraying operation

Observe the separate operating manual for the operating terminal.

Special instructions for spraying operation

- Test the field sprayer by carrying out calibration
  - o before the start of the season.
  - o in the case of deviations between the actual indicated spray pressure and the spray pressure prescribed in the spray table.
- Before starting spraying, determine the exact spray rate required, referring to the instructions of the crop protection agent manufacturer.

→ Before starting spraying, enter the required spray rate (target rate) in **AMATRON+ / AMASPRAY+**.

- During spraying operation, precisely adhere to the required spray rate [l/ha]
  - o in order to achieve the best possible results from your crop protection measure.
  - o to avoid unnecessary pollution of the environment.
- Select the required nozzle type from the spray table before spraying starts, taking account of
  - o the intended operational speed,
  - o the required spray rate and
  - o the required atomisation characteristic (fine, medium or coarse-dropped) of the crop protection agent used for the crop protection measure.

→ Refer to the section "Spray tables for flat-fan, anti-drift, injector and airmix nozzles", on page 211.

- Select the required nozzle size from the spray table before spraying starts, taking account of
  - o the intended operational speed,
  - o the required spray rate and
  - o the target spray pressure.

→ Refer to the section "Spray tables for flat-fan, anti-drift, injector and airmix nozzles", on page 211.

- Select a low operational speed and a low spray pressure to prevent wastage from drifting.

→ Refer to the section "Spray tables for flat-fan, anti-drift, injector and airmix nozzles", on page 211.

- At wind speeds of 3 m/s, take additional drift reduction measures (refer to the section "Measures for drift reduction", on page 160.

- Refrain from use if average wind speeds top 5 m/s (leaves and thin twigs move).
- Only switch the sprayer boom on and off during travel to avoid the application of excessive doses.
- Avoid the application of excessive doses through overlapping caused by imprecise bout tracking from one spray path to the next and/or when cornering on the headland with the sprayer boom switched on.
- When increasing operational speed, make sure that the maximum permissible pump drive speed of 550 rpm is not exceeded.
- During spraying operation, constantly check actual spray liquid consumption with reference to the area treated.
- Calibrate the flow meter if there are any differences between the actual and displayed spray rate.
- Calibrate the distance sensor (impulses per 100 m) if there are differences between the actual distance covered, and that displayed. See **AMATRON+** / **AMASPRAY+** operating manual.
- If spraying operation is interrupted due to bad weather, clean the suction filter, the pump, the valve chest and the spray lines. See page 171.

- Spray pressure and nozzle size influence drop size and the volume of liquid sprayed. The higher the spray pressure, the smaller the droplet diameter of the spray liquid. The smaller droplets are subject to increased, undesirable drifting.
- If the spray pressure is increased, the spray rate also increases.
- If the spray pressure is decreased, the spray rate also decreases.
- If the operational speed is increased while the nozzle size and spray pressure remain constant, the spray rate decreases.
- If the operational speed is decreased while the nozzle size and spray pressure remain constant, the spray rate increases.
- Operational speed and pump drive speed can be selected within broad limits, owing to the automatic, area-based spray rate control via the **AMATRON+ / AMASPRAY+**.

- The pump delivery capacity is dependent on the pump drive speed. Select the pump speed (between 400 and 550 rpm.) so that there is always an adequate flow rate to the sprayer boom and for the agitator. When making this choice, always take account of the fact that more spray liquid needs to be conveyed at higher operational speeds and higher spray rates.
- The agitator normally remains switched on from filling to the end of spraying operation. On this account, the instructions of the agent manufacturer are decisive.
- If there is a sudden significant drop-off in spray pressure, the spray liquid tank is empty.
- Residues in the spray liquid tank can be applied correctly up to a pressure drop of 25%.
- If the spray pressure drops off while conditions remain otherwise unaltered, the suction or pressure filter are blocked.

10.6.1 Applying the spray liquid

- Properly couple the field sprayer to the tractor.
- Before starting spraying, check the following machine data on the operating terminal
  - the values for the permitted spray pressure range of the spraying nozzles installed in the sprayer boom.
  - the value "Pulses per 100m".
- Take the appropriate action if a fault message appears on the display during spraying.
- Check the indicated spray pressure during spraying operation.

  Ensure that the indicated spray pressure does not deviate under any circumstances by more than ± 25 % from the target spray pressure given in the spray table, e.g. by changing the spray rate using the plus/minus buttons. Larger deviations than this from the target spray pressure make it impossible to achieve the best possible results from your crop protection measure and cause pollution of the environment.

  Decrease or increase the operational speed until you are back within the permissible spray pressure range for the target spray pressure.

Example

Required spray rate:	200 l/ha
Intended operational speed:	8 km/h
Nozzle type:	AI / ID
Nozzle size:	'03'
Permissible pressure range for the spraying nozzle when fitted	min. pressure 3 bar max. pressure 8 bar
Target spray pressure:	3.7 bar
Permissible spray pressure: 3.7 bar ±25 %	min. 2.8 bar and max. 4.6 bar

Fig. 110/...

1. Prepare and stir the spray liquid correctly in accordance with the instructions from the crop protection agent manufacturer. Refer to the section "Preparing the spray liquid", on page 140.
2. Switch on agitators **C**, **G** (only UG Super). The stirring can be infinitely adjusted:
3. Switch on the **AMATRON+** / **AMASPRAY+**.
4. Fold out the sprayer boom.
5. Depending on the nozzles being used, set the working height of the sprayer boom (gap between the nozzles and the crop) according to the spray table.
6. Switchover tap **F** to position **0**.
7. Switchover tap **E** to position **0**.
8. Switchover tap **D** (optional) to position .
9. Switchover tap **B** to position .
10. Switchover tap **A** to position .
11. Enter the "target rate" value for the required spray rate in the **AMATRON+** / **AMASPRAY** or check the stored value.
12. Run pump at pump operating speed.
13. Select the right tractor gear and move off.
14. Switch on spraying via the **AMATRON+** / **AMASPRAY**.

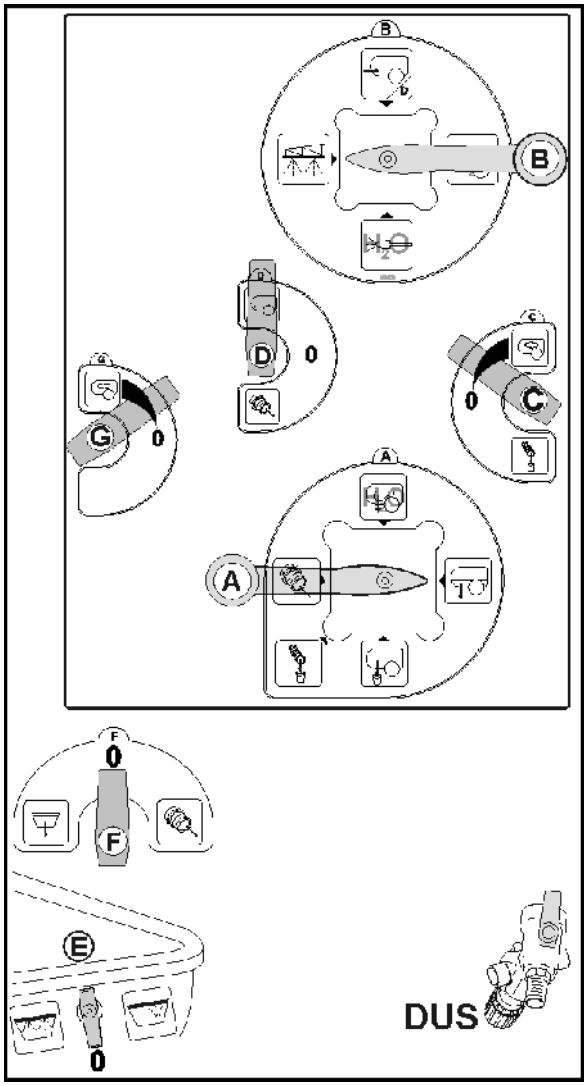

Fig. 110

At low spray rates, the pump speed can be reduced to save energy.

Driving to the field with the agitator switched on

1. Switch off the **AMATRON+** / **AMASPRAY+**.
2. Switch on the universal joint shaft.
3. Set the desired agitating intensity.

If this agitating intensity differs from that required for spraying operation, reset the agitating intensity selected for the journey before commencing spraying operation.

10.6.2 Drift reduction measures

- Reschedule treatment for the early morning or the evening hours (there is generally less wind).
- Choose larger nozzles and a higher water spray rate.
- Reduce spray pressure.
- Precisely maintain the working height of the boom, because the risk of drifting rises very sharply as the distance between the nozzles increases.
- Reduce operational speed (to below 8 km/h).
- Use so-called anti-drift (AD) nozzles or injector (ID) nozzles (nozzles which produce a high proportion of coarse drops).
- Observe the distance requirements of the respective crop protection agent

10.7 Residues

There are three types of residue:

- excessive residue remaining in the spray liquid tank when the spraying operation is finished

→ This excessive residue is discharged diluted or pumped-out and disposed of.

- the technical residue that remains in the spray liquid tank, the suction chest and the spray line when the spray pressure drops off by 25%

  The suction chest is composed of the suction filter, pump and pressure controller sub-assemblies. Observe the values for the technical residues given on page 104.

→ This technical residue is discharged diluted onto the field while cleaning the field sprayer.

- The final residue that remains in the spray liquid tank, the suction chest and the spray line after being cleaned with air discharge from the nozzles.

→ This final diluted residue is drained off after cleaning.

Disposing of residues

- Ensure that the residue in the spray line is still being sprayed at an undiluted concentration. Always spray this residue on an untreated area. The distance needed to use up this undiluted residue can be found in the section "Technical Data - spray lines", page 104. The residue contained in the spray line is dependent on the sprayer boom working width.
- Switch on the agitator for spraying the spray liquid tank empty when the residue in the spray liquid tank is only 5% of the nominal volume. With the agitator switched on, the technical residue increases compared to the specified values.
- Measures intended for the user's protection apply when emptying residues. Observe the instructions from the crop protection agent manufacturer and wear appropriate protective clothing.

10.7.1 Diluting the residue in the spray liquid tank and spraying the diluted residue at the end of spraying operation

For machines with comfort equipment, see operating manual for **AMATRON+**.

Fig. 111/...

1. Switch off the sprayer boom.
2. Move switch tap **F** to position **0**.
3. Move switch tap **E** to position **0**.
4. Move switch tap **D** to the position.
5. Move switch tap **B** to the position.
6. Move switch tap **A** to the position.
7. Run the pump at approx. 400 rpm.
8. Dilute the residue in the spray liquid tank with approx. **200** litres from the flushing water tank.
9. Move switch tap **A** to the position.
10. Move switch tap **B** to the position.
11. Move switch tap **D** to the position.
12. Spray the diluted residue onto an **untreated area**.
13. When the residue in the spray liquid tank falls below 50 litres, switch agitator **C** and **G** (UG Super) to **0**.
14. Flush the bypass line and pressure relief by switching spraying on and off five times.

- Keep spraying switched off for at least 10 seconds each time.
- The spray pressure should be at least 5 bar.

15.Repeat steps 3 to 14.

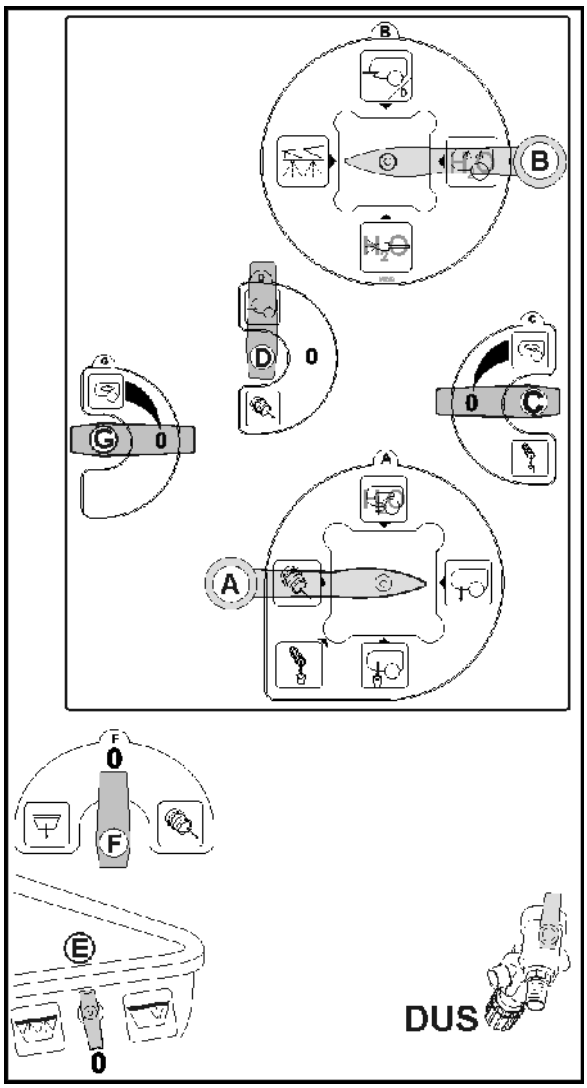

Fig. 111

10.7.2 Draining the spray liquid tank using the pump

Fig. 112/...

1. Connect the drainage hose to the drainage connection on the machine side using a two-inch camlock coupling.
2. Push the guard plate to the side and move switch tap **D** to the position.
3. Move switch tap **B** to the position.
4. Move switch tap **A** to the position.
5. Run the pump at pump operating speed (540 rpm).

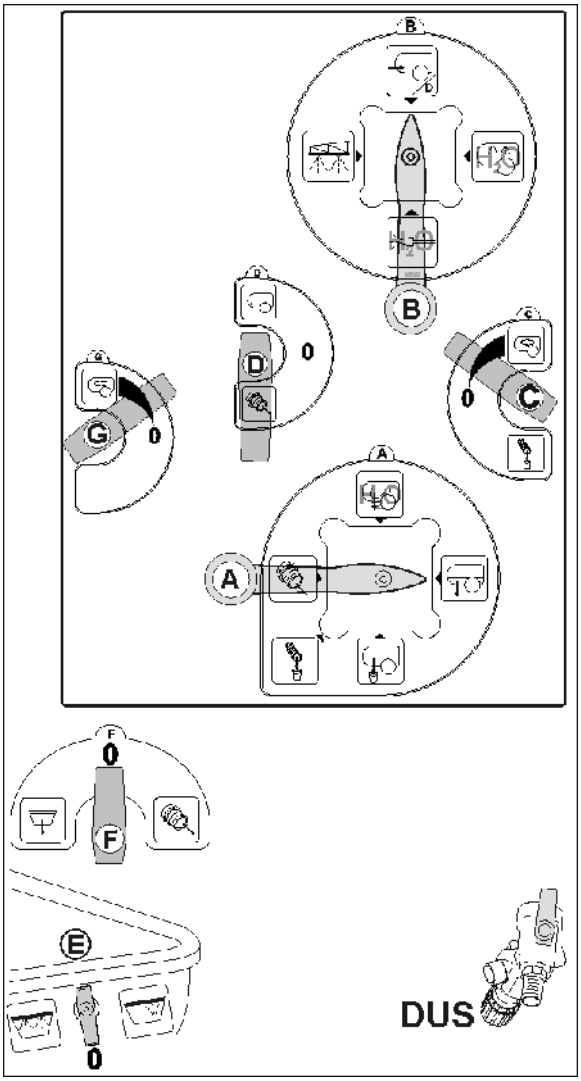

Fig. 112

10.8 Cleaning the field sprayer

- Keep the exposure time as short as possible, for example by daily cleaning after the spraying operation is complete. Do not leave the spray liquid in the spray liquid tank for an excessively long period, i.e. overnight.

  The service life and reliability of the field sprayer mainly depend on the exposure time of the crop protection agent on the materials of the field sprayer.
- Clean the field sprayer thoroughly before applying a different crop protection agent.
- Carry out the cleaning process on the field where you last carried out the treatment.
- Carry out the cleaning process using water from the flushing water tank.
- You can carry out the cleaning process in the courtyard if you have a collecting facility installed (e.g. a Biobed).

  Observe all national regulations involved.
- When spreading residues on areas already treated, observe the maximum permissible spray rate of the agents.

For machines with comfort equipment, see operating manual for **AMATRON+**.

10.8.1 Cleaning the sprayer with the tank empty

- Clean the spray liquid tank on a daily basis!
- The flushing water tank must be filled completely.
- The cleaning process should be carried out in a threefold reduction procedure.

Fig. 113/...

1. Spray the empty spray liquid tank with a strong jet of water.
2. Fill the spray liquid tank with approx. 400 l of water.
3. Completely open agitator(s) **C** , **G** to eliminate deposits in the hose.
4. Move switch tap **B** to the position
5. Move switch tap **A** to the position.
6. Run the pump at approx. 400 rpm.

→ Circulate the water from the spray liquid tank for several minutes in the closed circuit.

7. Move switch tap **B** several times between the and positions**.** This will flush all the valve chest components with clean water.
8. Change the stirring stage several times using the setting tap **C**.
9. Move switch tap **B** to the position.

→ Spray out the contents of the spray liquid tank.

10. Dump the technical residue; see on page 172.
11. Clean the suction filter; see **on page 167**.

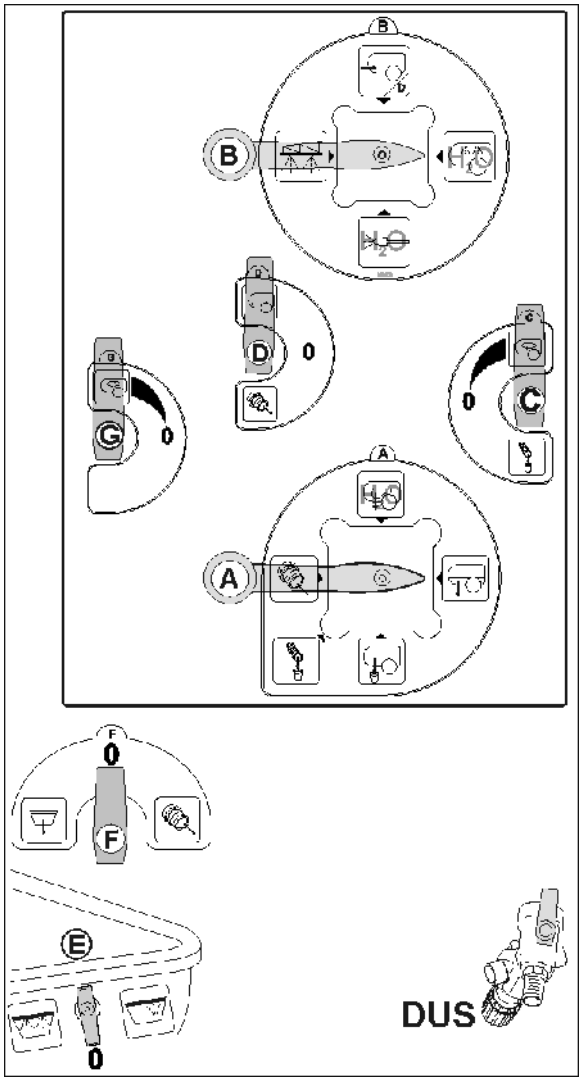

Fig. 113

10.8.2 Draining the final residues

- On the field: Spread the final residues over the field.
- In the courtyard:
  - o Place a suitable collecting container under the drain opening of the suction chest and the drain hose for the pressure filter and collect the final residues.
  - o Dispose of the collected spray liquid residue in accordance with the corresponding legal guidelines.
  - o Collect the spray liquid residues in suitable containers.

1. Place a suitable collection vessel under the outlet opening of the VARIO switch tap on the suction side.
2. Move switch tap **A** to the position and dump the final residue from the spray liquid tank into a suitable collection vessel.
3. Move switch tap **A** to the position and dump the final residue from the suction chest into a suitable collection vessel.
4. Place a suitable collection vessel under the outlet opening of the pressure filter.
5. Press guard plate back; set setting tap **C** to position and drain the final residue from the pressure filter.

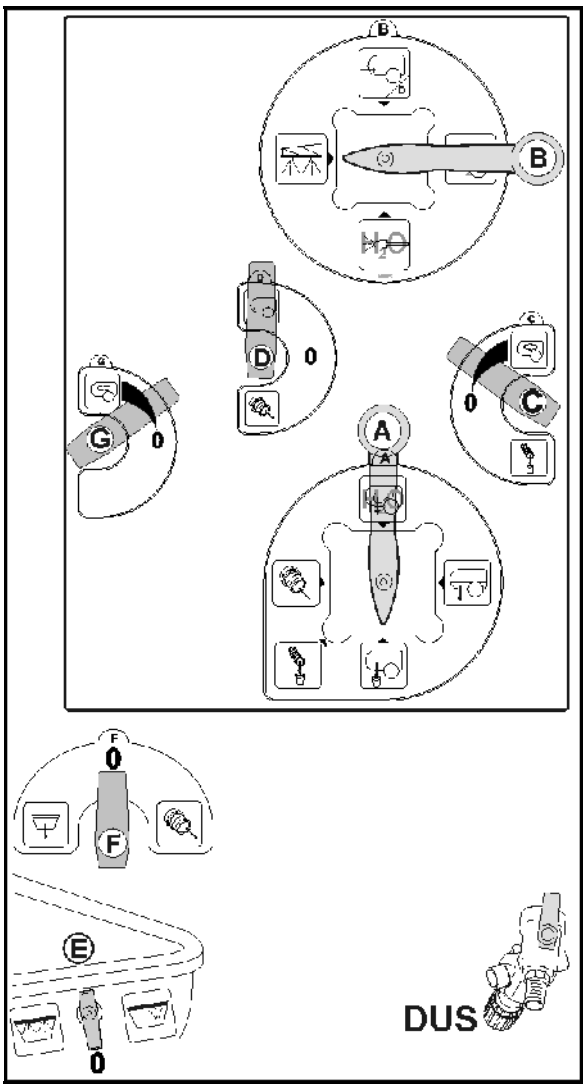

Fig. 114

10.8.3 Cleaning the suction filter when tank is empty

Clean the suction filter (Fig. 115) on a daily basis after cleaning the field sprayer.

1. Unscrew the cover of the suction filter (Fig. 115/2).
2. Remove the cover with suction filter (Fig. 115/3) and clean with water.
3. Reassemble the suction filter in the reverse sequence.
4. Check the filter housing for leaks.

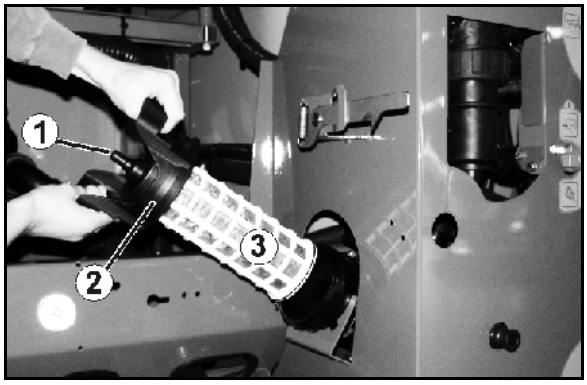

Fig. 115

10.8.4 Cleaning the suction filter when tank is full

1. Run the pump, adjust pump speed to 300 rpm.
2. Move switch tap **D** to the position.
3. Move switch tap **B** to the position.
4. Switch off agitator(s) **C, G** (UG Super).
5. Move switch tap **A** to the position.
6. Loosen cover plate on the suction filter (Fig. 115/1).
7. Activate relief valve on the suction filter (Fig. 115/2).
8. Remove cover plate and suction filter (Fig. 115/3) and clean with water.
9. Reassemble the suction filter in the reverse sequence.
10. Move switch tap **A** to the position.
11. Check the suction filter for leak tightness.

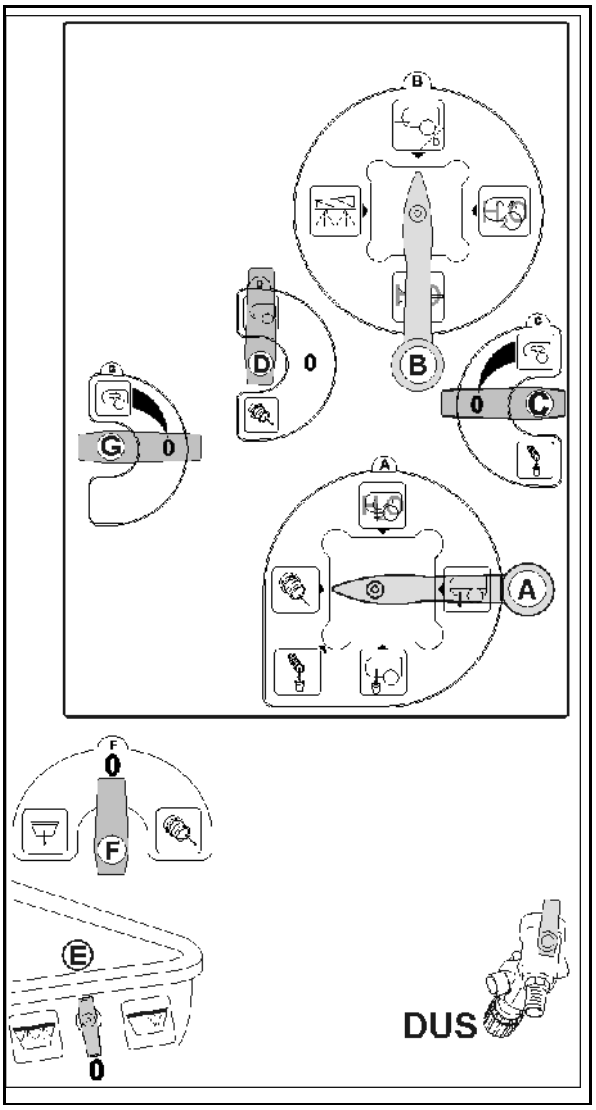

Fig. 116

10.8.5 Cleaning the pressure filter when the tank is empty

1. Undo the sleeve nuts.
2. Remove the pressure filter (Fig. 117/1) and clean with water.
3. Refill the pressure filter.
4. Check the screw connection for leaks.

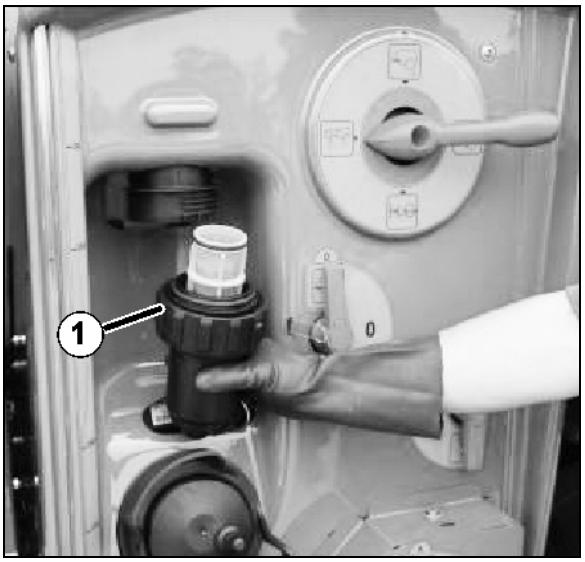

Fig. 117

10.8.6 Cleaning the pressure filter when the tank is full

1. Manually move suction chest **A** to position .
2. Move switch tap **C** to position .

→ Drain the residue into the pressure filter.

1. Undo the sleeve nuts.
2. Remove the pressure filter (Fig. 117/1) and clean with water.
3. Refill the pressure filter.
4. Check the screw connection for leaks.
5. Move switch tap **C** to position **0**.

10.8.7 External cleaning

Fig. 118/…

1. Move switch tap **F** to position **0**.
2. Move switch tap **E** to position **0**.
3. Move switch tap **D** (optional) to the .
4. Move switch tap **B** to the position.
5. Move switch tap **A** to the position.
6. Run the pump at pump operating speed (at least 400 rpm).
7. Clean the field sprayer and the sprayer boom with the spray gun.

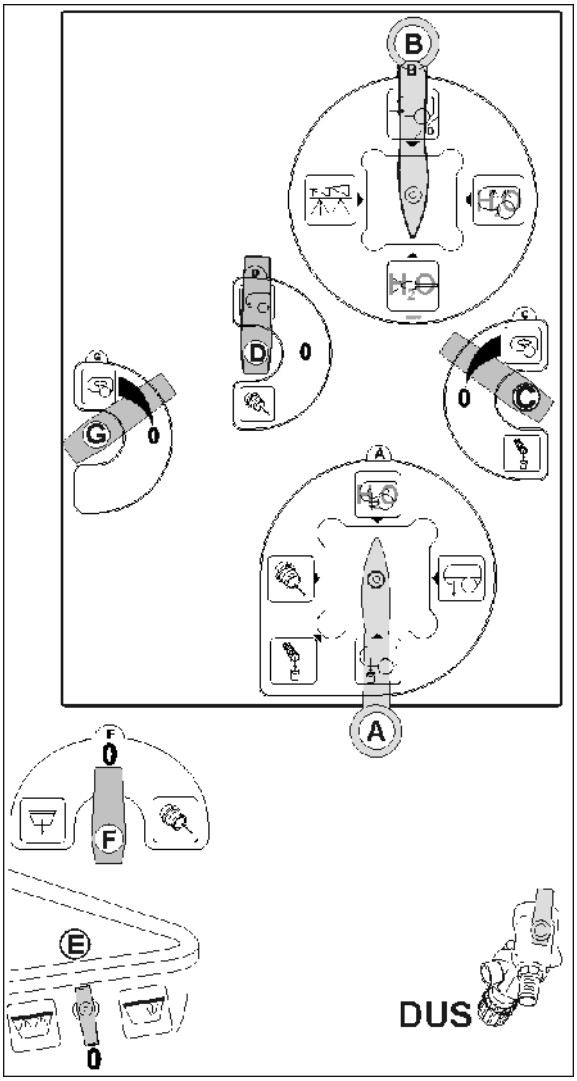

Fig. 118

10.8.8 Cleaning the sprayer during a critical agent change

1. Clean the sprayer in three runs as always, see page 165
2. Fill up the flushing water tank.
3. Clean the sprayer, two runs, see page 165.
4. If the sprayer has been previously filled via the pressure connector:

   Clean the induction bowl using the spray pistol and extract the content of the induction bowl.
5. Drain the final residue, see page 166.
6. By all means, clean the suction filter and pressure filter, see page 167.
7. Clean the sprayer, one run, see page 165.
8. Drain the final residue, see page 166

10.8.9 Cleaning the sprayer with a full tank (work interruption)

If spraying is interrupted due to bad weather, clean the suction chest (suction filter, pumps, pressure controller) and spray line.

Fig. 119/...

1. Switch off spraying at operator control terminal.
2. Switch off agitator **C.**
3. Move switch tap **B** to the position.
4. Move switch tap **A** to the position.
5. Run the pump at pump operating speed (at least 400 rpm).
6. Approx. 20 seconds after switching on the pump, close the DUS tap (DUS option) to avoid separation of the spray liquid.
7. Then spray the undiluted residue out of the sprayer boom onto an **untreated** area.
8. Then spray the residue - which has been diluted with water from the flushing water tank - out of the suction filter, pump, valve chest and spray line on to an **untreated** area.
9. Dump the technical residue from the valve chest into a suitable collection vessel; see on page 166.
10. Clean the suction filter; see on page 167.
11. Switch off pump drive.
12. Reopen the DUS tap.

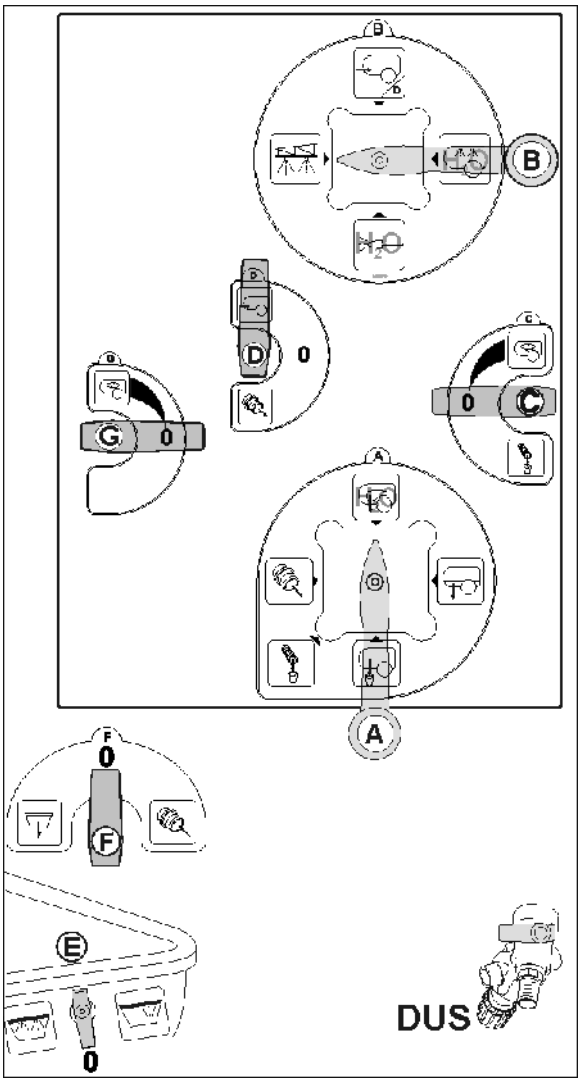

Fig. 119

Continuing the spraying operation

Before continuing with the spraying operation, activate the pump for five minutes at 540 min^{-1} and switch on the agitators completely.

11 Faults

WARNING

Risk of crushing, shearing, cutting, being caught and/or drawn in, or impact through

- **unintentional falling of the machine raised using the tractor's three-point linkage.**
- **unintentional falling of raised, unsecured machine parts.**
- **unintentional start-up and rolling of the tractor-machine combination.**

Secure the tractor and the machine against unintentional start-up and rolling before eliminating faults on the machine. See page 124.

Wait for the machine to stop before entering the machine danger area.

Fault	Cause	Remedy
There is no suction from the pump	Blockage on the suction side (suction filter, filter insert, suction hose).	Remove the blockage.
	Pump is sucking in air.	Check the hose connection of the suction hose (optional) on the suction port for leak tightness.
The pump does not have any power	Suction filter and filter insert dirty.	Clean suction filter and filter insert.
	The valves are jammed or damaged.	Change the valves.
	Pump is sucking in air, recognisable from the air bubbles in the spray liquid tank.	Check the hose connections on the suction hose for leak tightness.
The spray cone vibrates	Irregular delivery flow from the pump.	Check, and if necessary replace, the suction and pressure-side valves (see on page 200).
Oil/spray liquid mixture in the oil filler neck or clearly visible consumption of the oil	Pump diaphragm defective.	Change all six piston diaphragms (see 202).
The required spray rate entered is not achieved	High operational speed; low pump drive speed;	Reduce travel speed and increase the pump drive speed until the fault message goes off.
There has been a deviation from the permissible spray pressure range for the nozzle fitted to the sprayer boom	Deviation from the prescribed operational speed, which has an effect on the spray pressure	Alter your operational speed to return to the prescribed operational speed range set for spraying operation

12 Cleaning, maintenance and repair

WARNING

Risk of crushing, shearing, cutting, being caught and/or drawn in, or impact through

- **unintentional falling of the machine raised using the tractor's three-point linkage.**
- **unintentional falling of raised, unsecured machine parts.**
- **unintentional start-up and rolling of the tractor-machine combination.**

Secure the tractor and machine against unintentional start-up and rolling, before carrying out cleaning, maintenance or repair work on the machine; see page 124.

WARNING

Risk of crushing, shearing, cutting, being caught and/or drawn in, or impact through unprotected danger points.

- Mount protective equipment removed when cleaning, maintaining and repairing the machine.
- Replace defective protective equipment with new equipment.

DANGER

- **When carrying out maintenance and repair, observe the safety instructions, particularly "Field sprayer operation" section, on page 35.**
- **You may only carry out maintenance or repair work under moving machine parts that are in a raised position if such parts are secured with suitable, positive-fit locking devices against accidental lowering.**

Before each start-up

1. Check hoses/tubes and connection pieces for any visually obvious defects/leaking connections.
2. Repair any areas of chafing on hoses and pipes.
3. Immediately replace worn or damaged hoses and pipes.
4. Immediately repair leaking connections.

- Regular and proper maintenance will keep your trailed sprayer in good condition for a long time, and will prevent early signs of wear. Regular and proper maintenance is a requirement of our warranty conditions.
- Use only genuine **AMAZONE** spare parts (see "Spare and wear parts and aids" section, page 17).
- Use only genuine **AMAZONE** replacement hoses, and hose clamps made of V2A for assembly.
- Specialist knowledge is the requirement for carrying out testing and maintenance operations. This specialist knowledge is not given here in this operating manual.
- Observe environmental protection measures when carrying out cleaning and maintenance work.
- Observe legal requirements when disposing of lubricants, e.g. oils and grease. Also affected by these legal requirements are parts that come into contact with these lubricants.
- Do not exceed a greasing pressure of 400 bar when greasing with high pressure grease guns.
- The following are prohibited:
  - drilling the running gear.
  - drilling through pre-existing holes on the transport frame.
  - welding load-bearing components.
- Protective measures are necessary, such as covering lines or extending lines in particularly critical locations
  - during welding, drilling and grinding work.
  - when working with cut-off wheels near plastic lines and electric wires.
- Clean the field sprayer thoroughly with water before carrying out repair work.
- Carry out repair work on the field sprayer with the pump switched off.
- Thorough cleaning must be carried out before repair work can be carried out inside the spray liquid tank. Keep out of the spray liquid tank.
- Disconnect the machine cable and power supply from the on-board computer when carrying out any cleaning or maintenance work. This applies especially to welding on the machine.

12.1 Cleaning

- Pay particular attention to the brake, air and hydraulic hose lines.
- Never treat brake, air or hydraulic hose lines with benzin, benzene, petroleum or mineral oils.
- After cleaning, grease the machine, in particular after cleaning with a pressure washer / steam jet or liposoluble agents.
- Observe the statutory requirements for the handling and removal of cleaning agents.

Cleaning with a pressure washer / steam jet

- Always observe the following points when using a pressure washer / steam jet for cleaning:
  - Do not clean any electrical components.
  - Do not clean any chromed components.
  - Never aim the cleaning jet from the cleaning nozzle of the pressure washer / steam jet directly on lubrication and bearing points.
  - Always maintain a minimum jet distance of 300 mm between the pressure washer or steam jet cleaning nozzle and the machine.
  - Comply with safety regulations when working with pressure washers.

12.2 Winter storage and long periods out of operation

1. Clean the field sprayer thoroughly before placing it in winter storage; see on page 175.
2. Remove and clean the suction filter (Fig. 120/1); see **on page 167**.
3. Run the pump at a universal joint shaft speed of 300 rpm and let it "pump dry" when flushing is complete and liquid is no longer coming out of the spraying nozzles.
4. Switch off the universal joint shaft.
5. Agitator:
   5.1 Drain the pressure filter (Fig. 120/2) via tap **C**.
   Setting tap **C** to position .
   5.2 Unscrew the agitator hose (Fig. 121/4) (which comes out of tap **C**) from the spray liquid tank.
6. Unscrew the supply hose (Fig. 121/1) from the control valve. The supply hose connects the VARIO switch tap on the pressure side (Fig. 120/**B**) with the suction chest.
7. Unscrew the return hose (Fig. 121/2) for the part width section valve from the VARIO switch tap on the suction side (Fig. 120/**A**).
8. Detach the hose (Fig. 122/1) from the switch tap **F**.
   Swivel the switch tap **F** (Fig. 122/2) to position .
9. Remove the internal cleaning hose (Fig. 121/3) for the VARIO switch tap on the pressure side (Fig. 120/**B**).
10. Remove the pressure hose (Fig. 123/1) for the pump so that any remaining water can flow out of the pressure hose and VARIO switch tap on pressure side **B**.
11. Also remove the external cleaning hose even if there is no external cleaning (Fig. 121/5).

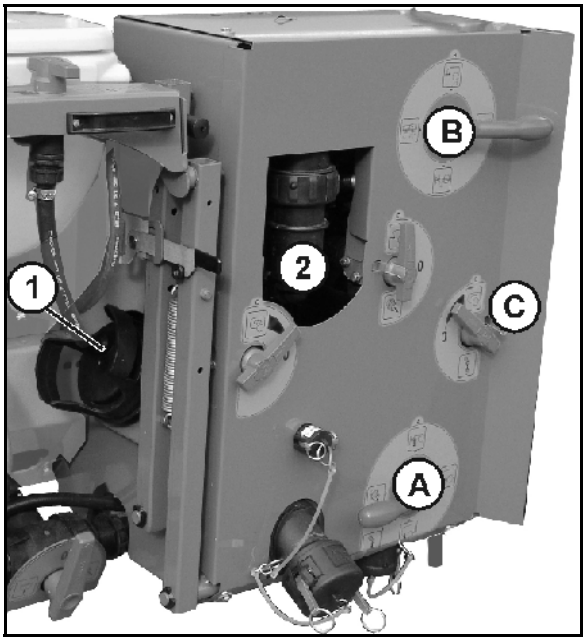

Fig. 120

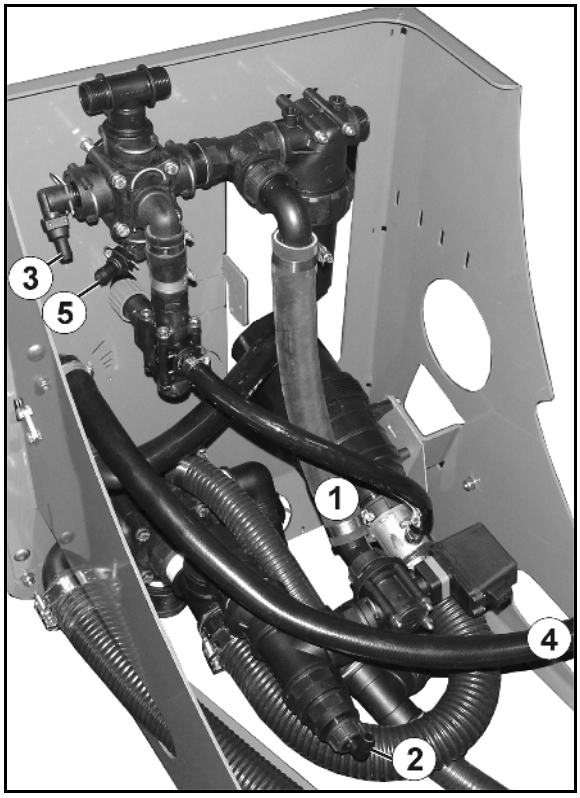

Fig. 121

12. Switch the universal joint shaft back on and run the pump for approx. ½ a minute until liquid is no longer coming out of the pressure-side connection.

> Do not refit the pressure hose until it is needed again.

13. Remove all the spray lines from the part width section valves (Fig. 124/1) and blow out with compressed air.
14. Remove all the nozzles.
15. Move the VARIO switch tap on the suction side (Fig. 120/**A**) and the VARIO switch tap on the pressure side (Fig. 120/**B**) several times between all their switch positions.
16. Move all remaining switch levers several times between all their switch positions.

> Store the removed suction filter until it is needed again in the field sprayer filling sieve.

17. Cover the pump pressure connection to protect it from dirt.
18. If the sprayer is also equipped with a pressure circulating system
    - Remove the drain plug (Fig. 125/1) from the pressure relief valve.
    - Open the DUS switchover tap (Fig. 125/2).
19. Lubricate the universal joints on the PTO shaft and, for longer periods out of operation, grease the section tube.
20. Before winter storage, change the oil in the pump.

> - At temperatures below freezing, hand crank the piston diaphragm pumps before starting to prevent residual ice from damaging the piston and piston diaphragm.
> - Keep electronic equipment free from frost.

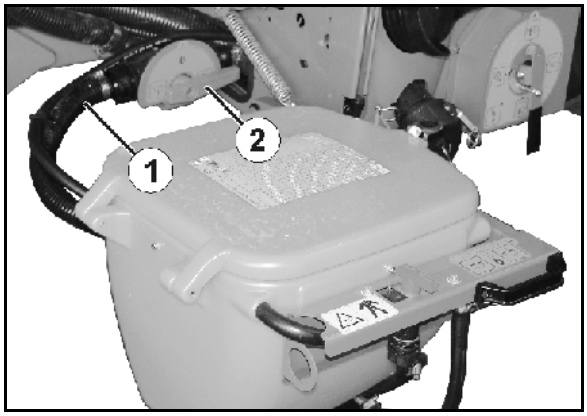

Fig. 122

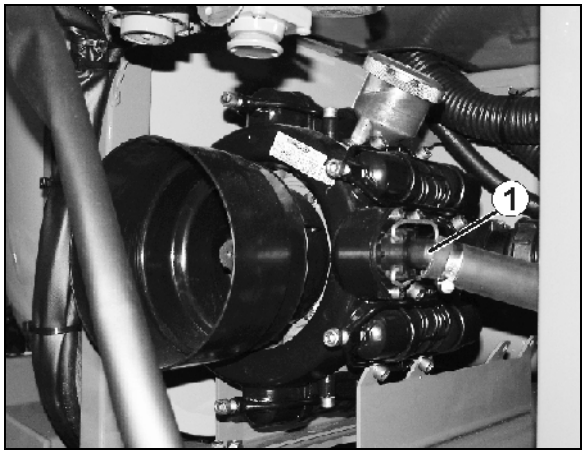

Fig. 123

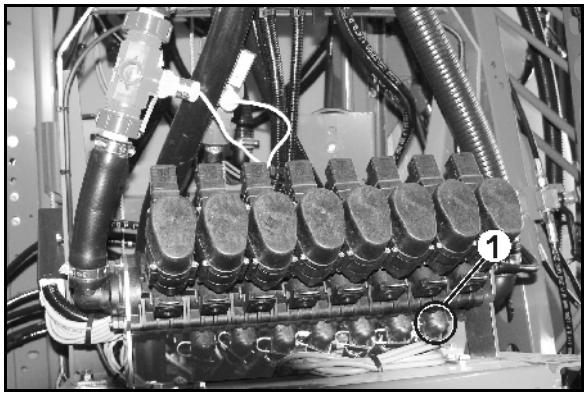

Fig. 124

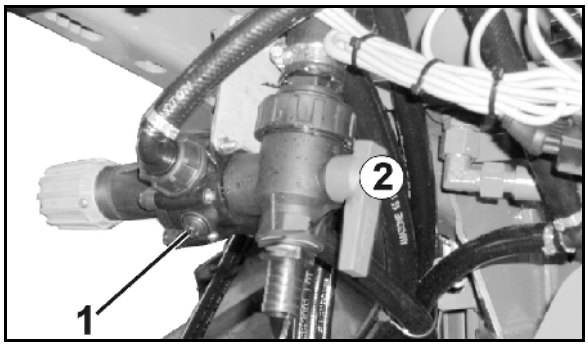

Fig. 125

Empty the flushing water tank

1. Remove the screw lid from the emptying opening under the flushing water tank and drain off the flushing water.
2. Then screw the cover plate back on again.

12.3 Lubrication instructions

Lubricate all grease nipples (keep gaskets clean).

Lubricate / grease the machine at the specified intervals.

Lubrication points on the machine are indicated with the foil (Fig. 126).

Carefully clean the lubrication points and grease gun before lubrication so that no dirt is pressed into the bearings. Press the dirty grease out of the bearings completely and replace it with new grease.

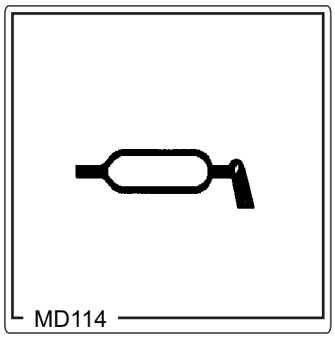

Fig. 126

12.3.1 Lubricants

For lubrication, use a lithium saponified, multipurpose grease with EP additives:

Company	**Lubricant designation**	
	Normal use conditions	Extreme use conditions
ARAL	Aralub HL 2	Aralub HLP 2
FINA	Marson L2	Marson EPL-2
ESSO	Beacon 2	Beacon EP 2
SHELL	Ratinax A	Tetinax AM

12.3.2 Lubrication point overview

Fig. 127	Lubrication point	Interval [h]	Number of lubrication points	Type of lubrication
1	Towing eye	50	1	Grease
2	Drawbar bearing	50	2	Grease
3	Parking brake	100	1	Grease the cables and guide rollers. Grease the spindle using the grease nipple.
Fig. 128	PTO shaft	see below	5	
Fig. 129	Axle			
1	Brake shaft bearing, outer and inner	200		
2	Linkage adjuster	1000		
3	Renew wheel hub bearing grease, check taper roller bearings for wear	1000		

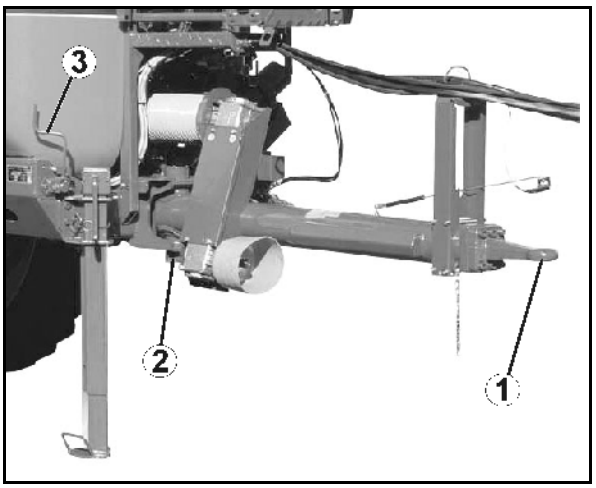

Fig. 127

PTO shaft

For winter operation, grease the protective tubes to prevent them from freezing.

Also observe the installation and service instructions from the PTO shaft manufacturer, which are fastened to the PTO shaft.

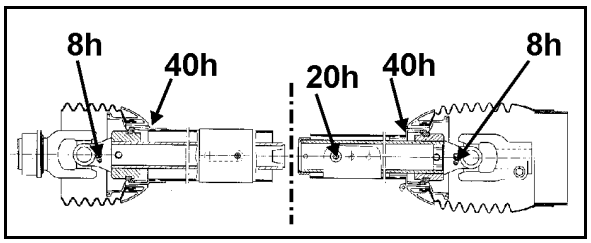

Fig. 128

Axle

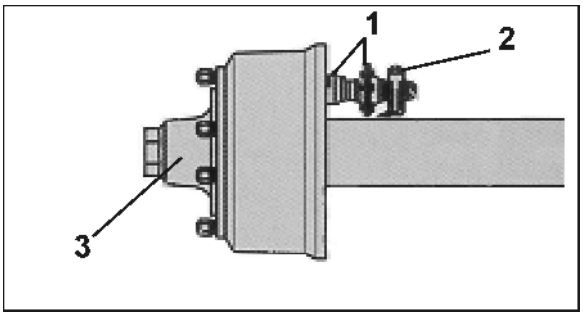

Fig. 129

Brake shaft bearing, outer and inner

Caution: no grease or oil should be allowed to get into the brakes. Depending on the model series, the cam bearing for the brakes may not be sealed.

Only use lithium saponified grease with a dropping point greater than 190 °C.

Renewing the wheel hub bearing grease

1. Jack up the vehicle securely and release the brakes.
2. Remove the wheels and dust caps.
3. Remove the lynch pin and unscrew the axle nut.
4. Use a suitable extraction device to remove the wheel hub and brake drum, taper roller bearing and sealing elements from the axle stub.
5. Label the removed wheel hubs and bearing cages so that you do not confuse them when refitting.
6. Clean the brakes, check for wear, sound condition and function and replace worn parts.

   The interior of the brake must be kept free from lubricants and dirt.
7. Thoroughly clean the interior and exterior of the wheel hubs. Remove all traces of old grease. Thoroughly clean the bearings and seals (diesel oil) and check for reusability.

   Before refitting the bearings, lightly grease the bearing carrier and then refit all parts in the reverse order. Carefully fit parts with press fits and pipe bushings so that they are not twisted or damaged.

   The bearings, the wheel hub cavity between the bearings and the dust cap must be smeared with grease before fitting. The grease should fill approximately a quarter to a third of the space in the fitted hub.
8. Fit the axle nut and adjust the bearing and brake. Finally, carry out a function check and an appropriate test run and rectify any detected faults.

12.4 Service plan – overview

- Carry out maintenance work when the first interval is reached.
- The times, continuous services or maintenance intervals of any third party documentation shall have priority.

After the first working run

Component	Maintenance work	see page	Workshop work
Wheels	• Wheel nut check	190	
Hydraulic system	• Check for leak tightness	192	
Spraying pump	• Check the oil level	199	

On a daily basis

Component	Maintenance work	see page	Workshop work
Whole machine	• Visual check for faults		
Fluid filter (Profi-folding)	• Check the clogging indicator	195	
	If necessary, replace		X
Spraying pump	• Cleaning, flushing	199	
Spray liquid tank		164	
Line filter in the nozzle lines (if present)		206	
Spraying nozzle		205	
Brake	• Drain air reservoir	187	

Weekly / every 50 working hours

Component	Maintenance work	see page	Workshop work
Hydraulic system	• Check for leak tightness	192	X
Wheels	• Check the air pressure.	190	

Every three months / 200 operating hours

Component	Maintenance work	see page	Workshop work
Brake	• Check for leak tightness • Check pressure in the air reservoir • Check brake cylinder pressure • Visual inspection of brake cylinder • Joints on brake valves, brake cylinders and brake linkages	188	X
	• Linkage adjuster brake settings	186	X
	• Brake pad check		
Wheels	• Check play on wheel hub bearings	185	X
Line filter	• Clean • Replace damaged filter inserts	206	
Parking brake	• Check the braking effect with the brake on	189	

Annually / 1000 operating hours

Component	Maintenance work	see page	Workshop work
Spraying pump	• Changing the oil	199	X
	• Check valves, replace as necessary	200	X
	• Check the piston diaphragm and, if necessary replace	201	X
Flow meter and return flow meter	• Calibrate the flow meter • Align the return flow meter	202	
Nozzles	• Calibrate the field sprayer and check the lateral distribution; if necessary, replace worn nozzles	205	
Brake drum	• Check for dirt	184	X
Wheels	• Wheel nut check	190	
Brake	Automatic linkage adjuster • Check function • Brake settings	186	X

As necessary

Component	Maintenance work	see page	Workshop work
Super-S boom	• Correct the settings	196	
Electric lighting	• Replace defective bulbs	208	
Solenoid valves	• Clean	195	X
Hydraulic throttle valve	• Adjusting the operating speed	196	
Drawbar	• Replace worn parts	183	

12.5 Drawbars

DANGER!

- **Replace damaged drawbars immediately on road safety grounds.**
- **Repairs may only be carried out by the manufacturing factory.**
- **For reasons of safety, performing welding and drilling work on the drawbar is prohibited**

Regularly lubricate the drawbar.

Yoke bar

The pulling eye diameter of the yoke bar, when new, is 40 or 50 mm.

Wear to the pulling eye is permissible; this will increase the pulling eye diameter by up to 1.5 mm.

If wear is greater than this, the wearing bushing on the pulling eye must be promptly replaced.

Hitch drawbar

Wear to the pulling eye is permissible; this will increase the pulling eye diameter by up to 1.5 mm.

If wear is greater than this, the ball point coupling on the eye must be promptly replaced.

12.6 Axle and brake

For optimum brake performance with a minimum of wear, we recommend that the brakes on the tractor are balanced with those on the trailed sprayer. After the service braking system has been run in for a suitable period, arrange for the brakes to be balanced by a specialist workshop.

Have the balancing process carried out before these empirical values are reached if you discover excessive wear on the brake pads.

To avoid problems with the brakes, adjust all vehicles in accordance with EC Directive 71/320 EEC.

WARNING

- **Repair and adjustment work on the service braking system should only be carried out by trained specialist personnel.**
- **Special care is required for welding, torch cutting and drilling work in the vicinity of brake lines.**
- **Always perform a braking test after any adjusting or repair work on the braking system.**

General visual inspection

WARNING

Carry out a general visual inspection of the brake system. Observe and check the following criteria:

- **Pipe lines, hose lines and coupler heads must not be externally damaged or corroded.**
- **Hinges, e.g. on fork heads, must be properly secured, easy to move, and not worn out.**
- **Ropes and cables**
  - **must be properly run.**
  - **may not have any visible cracks.**
  - **may not be knotted.**
- **Check the piston stroke on the brake cylinders, and adjust as necessary.**
- **The air reservoir must not**
  - **move around in the tensioning belts.**
  - **be damaged.**
  - **show any outward signs of corrosion damage.**

Checking the brake drum for dirt (workshop work)

1. Unscrew the two cover plates (Fig. 130/1) on the inside of the brake drum.
2. Remove any dirt and plant debris which may have entered the drum.
3. Refit the cover plates.

CAUTION

Dirt entering the drums may be deposited on the brake pads (Fig. 130/2) and thus die appreciably reduce brake performance.

Risk of accident.

If dirt is discovered in the brake drum, the brake pads must be inspected by a specialist workshop.

For this to happen, the wheel and brake drum must be removed.

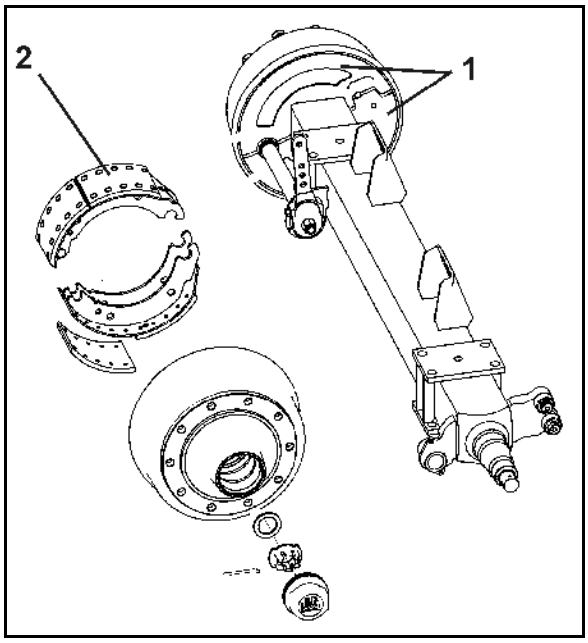

Fig. 130

Checking wheel hub bearing clearance (workshop work)

To check the play on wheel hub bearings, raise the axle until the wheels turn freely. Release the brake. Place a lever between the tyre and the ground and check the play.

If bearing play can be detected:

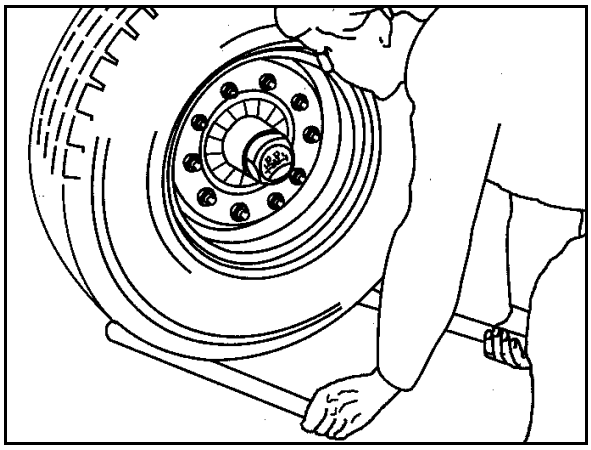

Fig. 131

Adjust the bearing play

- Remove the dust cup or hub cap.
- Remove the split pin from the axle nut.
- Tighten the wheel nut while turning the wheel at the same time until the wheel hub is lightly braked as it turns.
- Turn axle nut back to the next available split pin hole. To the next matching hole (max. 30°).
- Fit split pin and bend slightly open.
- Top up the dust cap with high melting point grease and drive it into, or screw it onto the wheel hub.

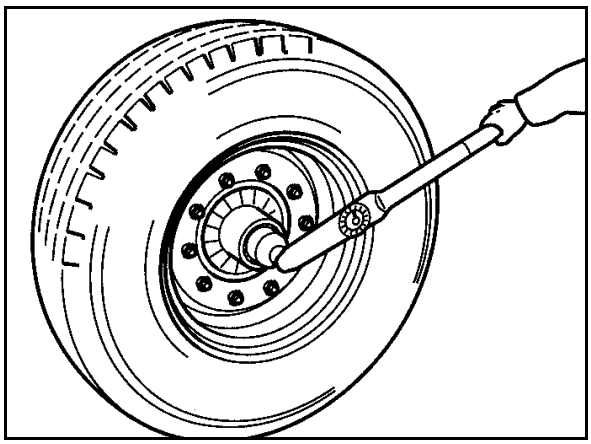

Fig. 132

Brake pad check

Open the inspection hole (Fig. 133/1) by pulling out the rubber stopper (if present).

At a residual thickness

a:	for riveted pads	5 mm
	(N 2504)	3 mm
b:	for adhesive pads	2 mm

the brake pad must be replaced.

Reinsert the rubber tab.

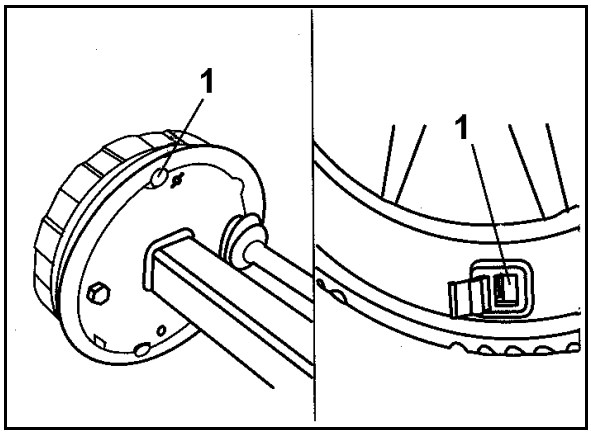

Fig. 133

Brake adjustment

Depending on use, the wear and function of the brakes must be constantly checked and, if necessary, readjustment must be carried out. Readjustment is required after using approx. 2/3 of the max. cylinder stroke for emergency braking. To do this, jack up the axle and secure it against unintended movement.

Adjustment on linkage adjuster (workshop work)

Move the linkage adjuster by hand in the pressure direction. If the free travel of the long-stroke diaphragm cylinder pressure rod is max. 35 mm, the wheel brake must be readjusted.

Adjustments are made using the readjustment hexagon bolt on the linkage adjuster. Set the free travel "a" to 10-12 % of the connected brake lever length "B",
e.g. lever length 150 mm = free travel 15 – 18 mm.

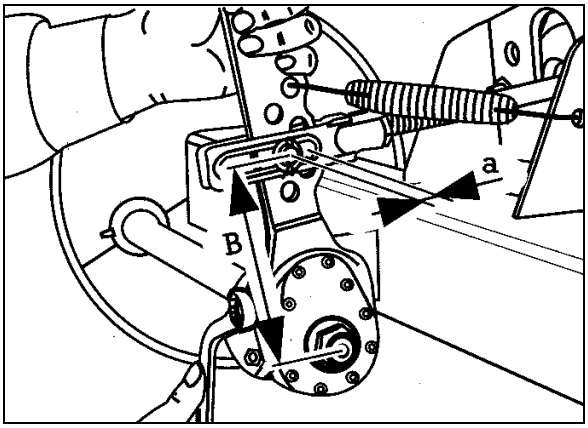

Fig. 134

Adjustment on automatic linkage adjuster (workshop work)

Basic settings are made in the same way as for the standard linkage adjuster. Readjustment occurs automatically at a cam rotation of approx. 15°.

The ideal lever position (which cannot be altered owing to the attachment of the cylinder) is approx. 15° before perpendicularity, and the same in the actuation direction.

Checking the function of the automatic linkage adjuster

1. Remove the rubber stopper cap.
2. Slacken the adjusting screw (arrow) with a ring spanner approx. ¾ of a turn anti-clockwise. There must be a free travel of at least 50 mm for a lever length of 150 mm.
3. Actuate the brake lever several times by hand. This should cause a smooth automatic readjustment; it should be possible to hear the coupling engaging and, on the back stroke, the adjusting screw should turn clockwise slightly.
4. Refit the stopper cap.
5. Lubricate with BPW ECO_Li91 special high melting point grease.

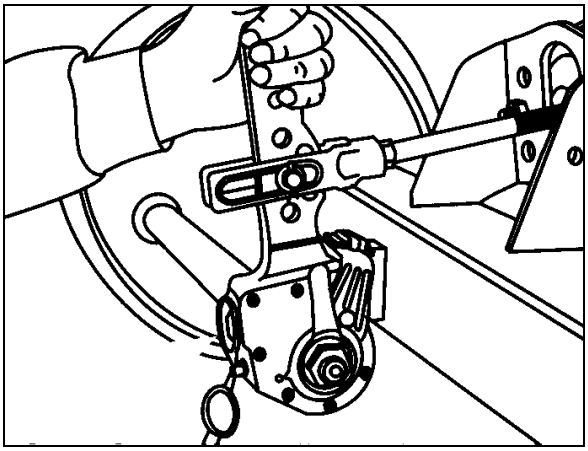

Fig. 135

Air reservoir

Drain the air reservoir every day.

Fig. 136/...

(1) Air reservoir

(2) Tensioning belts

(3) Drainage valve

(4) Test connection for pressure gauge.

1. Pull the drain valve (3) in a sideways direction using the ring until no more water escapes from the air reservoir (1).

→ Water flows out of the drain valve (3).

2. Unscrew the drain valve (3) from the air reservoir and clean the reservoir if there are signs of dirt.

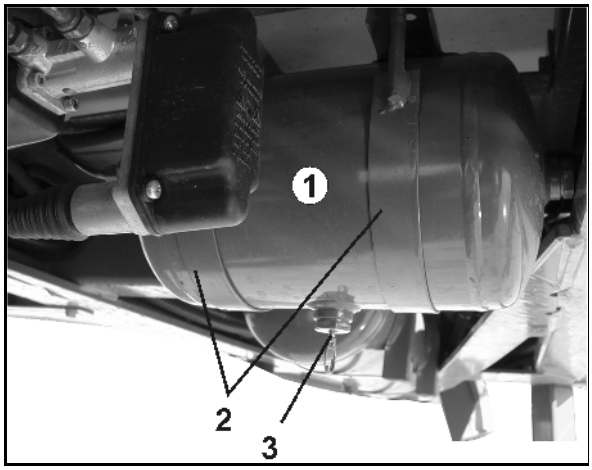

Fig. 136

Line filter

- **Change damaged filter inserts.**

1. Press together the locking piece on the two lugs.
2. Remove the locking piece with O-ring, pressure spring and filter insert.
3. Clean (rinse out) the filter insert with petrol or thinner and blow dry with compressed air.
4. To reassemble, reverse the procedure and make sure that the O-ring is not twisted in the guide slot.
5. Insert the locking piece with O-ring, pressure spring and filter insert.

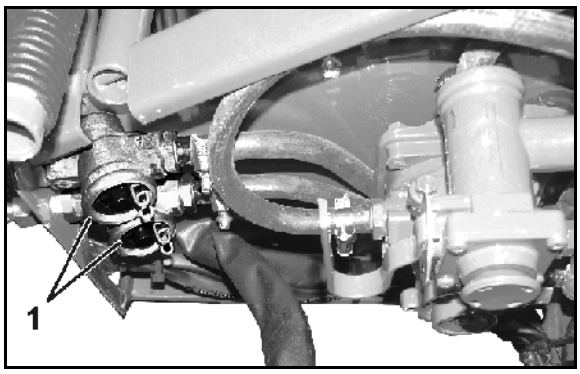

Fig. 137

When inserting the locking piece, make sure that the O-ring is not twisted in the guide slot.

12.6.1 Inspection instructions for dual-line service brake system (workshop work)

1. Leak tightness check

1. Check all connections, pipe lines, hose lines and screw connections for leak tightness.
2. Remedy leakages.
3. Repair any areas of chafing on pipes and hoses.
4. Replace porous and defective hoses.
5. The dual-circuit service brake system may be considered leak-proof if the drop in pressure is no more than 0.15 bar after 10 minutes.
6. Seal any leaking areas or replace leaking valves.

2. Checking the pressure in the air reservoir

1. Connect a pressure gauge to the test connection on the air reservoir.

   Set value 6.0 to 8.1 $^{+0.2}$ bar

3. Checking the brake cylinder pressure

1. Connect a pressure gauge to the test connection on the brake cylinder.

   Set value: with brake not applied 0.0 bar

4. Visual inspection of the brake cylinder

1. Check the dust sleeves or gaiters (

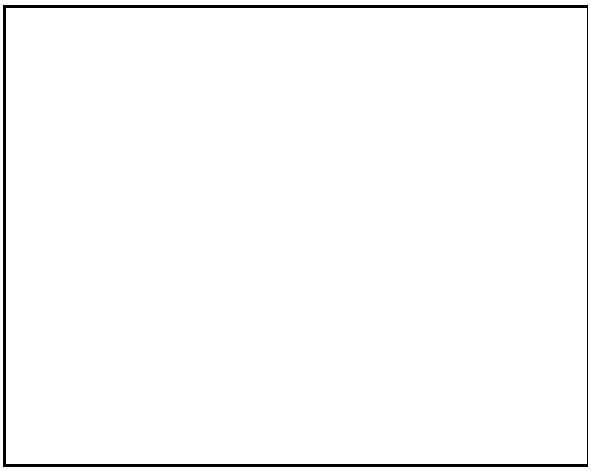

Fig. 136

/5) for damage.

2. Replace damaged parts.

5. Joints on brake valves, brake cylinders and brake linkages

Joints on brake valves, brake cylinders and brake linkages must move freely. Grease or lightly oil, if necessary.

12.7 Parking brake

On new machines, the brake cables of the parking brake may stretch.

Readjust the parking brake,

- if three quarters of the spindle tensioning distance is required to firmly apply the parking brake.
- if you have just fitted new brake pads.

Adjusting the parking brake

When the parking brake is off, the brake cable must be slightly slack. However, the brake cable must not rest or chafe against other parts of the vehicle.

1. Release the cable clamps.
2. Shorten the brake cable as appropriate and retighten the cable clamps.
3. Check for the correct braking effect from the parking brake when applied.

12.8 Tyres / wheels

- **Required tightening torque for wheel nuts or bolts:**

  450 Nm

- Regularly check the
  - wheel nuts for firm seating.
  - tyre pressure (for information on this, see below).
- Only use the tyres and wheels which we have specified, see on page 49.
- Repair work on tyres must only be carried out by specialists using suitable assembly tools.
- Tyre fitting requires sufficient skills and proper assembly tools.
- Use the jack only at the jacking points indicated.

12.8.1 Tyre pressures

- The required tyre pressure is dependent on
  - tyre size.
  - tyre loading capacity.
  - speed.
- The operational performance of the tyres is reduced
  - by overloading.
  - if tyre pressure is too low.
  - if tyre pressure is too high.

- Check tyre pressures regularly when the tyres are cold, i.e. before starting a run (see on page 49).
- The difference in pressure between the tyres on one axle must be no greater than 0.1 bar.
- Tyre pressure can be raised by up to 1 bar after a fast run or in warm weather. Tyre pressure should on no account be reduced as it is then too low when the tyres cool down.

12.8.2 Fitting tyres (workshop work)

- Remove any instances of corrosion from the wheel rim seating surfaces before fitting a new / another tyre. Corrosion can cause damage to the wheel rims when the vehicle is in operation.
- When fitting new tyres, always use new valves for tubeless tyres or new inner tubes.
- Always fit the valves with valve caps which have a gasket insert.

Fitting tyres:

To jack up the machine for tyre changes, place the jack at the jacking point indicated (Fig. 138/1).

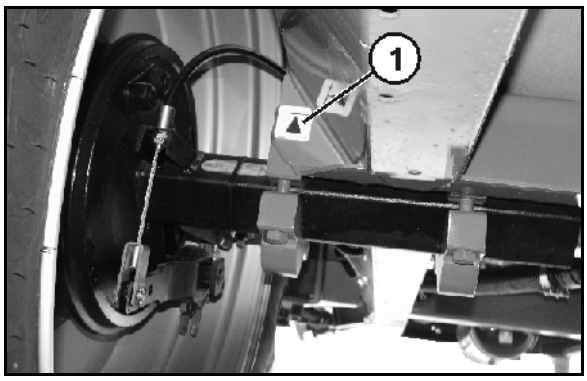

Fig. 138

12.9 Hydraulic system

WARNING

Risk of infection through the high pressure hydraulic fluid of the hydraulic system entering the body.

- Only a specialist workshop may carry out work on the hydraulic system.
- Depressurise the hydraulic system before carrying out work on the hydraulic system.
- When searching for leak points, always use suitable aids.
- Never attempt to plug leaks in hydraulic hose lines with the hand or fingers.

  Escaping high pressure fluid (hydraulic fluid) may pass through the skin and ingress into the body, causing serious injuries.

  If you are injured by hydraulic fluid, contact a doctor immediately. Risk of infection

- When connecting the hydraulic hose lines to the hydraulic system of connected machines, ensure that the hydraulic system is depressurised on both the drawing vehicle and the trailer.
- Ensure that the hydraulic hose lines are connected correctly.
- Regularly check all the hydraulic hose lines and couplings for damage and impurities.
- Have the hydraulic hose lines checked at least once a year by a specialist for proper functioning.
- Replace the hydraulic hose lines if they are damaged or worn. Only use original **AMAZONE** hydraulic hose lines.
- The hydraulic hose lines should not be used for longer than six years. This period includes any storage time of a maximum of two years. Even with proper storage and approved use, hoses and hose connections are subject to natural ageing, thus limiting the length of use. However, it may be possible to specify the length of use from experience values, in particular when taking the risk potential into account. In the case of hoses and hose connections made from thermoplastics, other guide values may be decisive.
- Dispose of old oil in the correct way. If you have problems with disposal, contact your oil supplier.
- Keep hydraulic fluid out of the reach of children!
- Ensure that no hydraulic fluid enters the soil or waterways.

12.9.1 Labelling hydraulic hose lines

Valve chest identification provides the following information:

Fig. 139/...

(1) Manufacturer's marking on the hydraulic hose line (A1HF)

(2) Date of manufacture of hydraulic hose line (04 / 02 = year / month = February 2004)

(3) Maximum approved operating pressure (210 BAR).

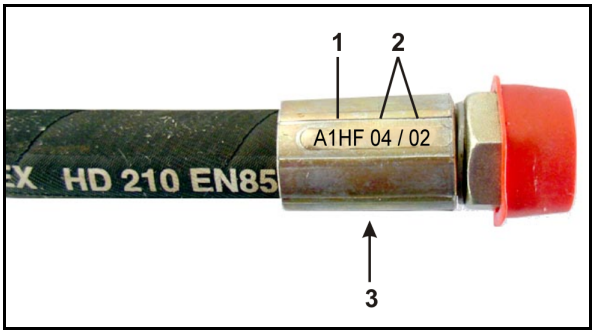

Fig. 139

12.9.2 Maintenance intervals

After the first 10 operating hours, and then every 50 operating hours

1. Check all the components of the hydraulic system for tightness.
2. If necessary, tighten screw unions.

Before each start-up:

1. Check the hydraulic hose lines for visible damage.
2. Repair any areas of chafing on hydraulic hose lines and pipes.
3. Replace any worn or damaged hydraulic hose lines immediately.

12.9.3 Inspection criteria for hydraulic hose lines

For your own safety and in order to reduce pollution, ensure the following inspection criteria.

Replace hoses if the respective hose fulfils at least one of the following criteria:

- Damage to the outer layer up to the ply (e.g. scouring points, cuts, cracks).
- Brittleness of the outer layer (crack formation of the hose material).
- Deformations which do not match the natural shape of the hose. Both in a depressurised and pressurised state or when bent (e.g. layer separation, bubble formation, pinching, bends).
- Leak points.
- Installation requirements not complied with.
- Life span of 6 years has been exceeded.

  The date of manufacture of the hydraulic hose line on the assembly is decisive for determining these six years. If the date of manufacture on the assembly is "2004", then the hose should not be used beyond February 2010. See also "Labelling of hydraulic hose lines".

Common causes for leaking hoses / pipes and connection pieces include:

- missing O-rings or seals
- damaged or badly fitting O-rings
- brittle or deformed O-rings or seals
- foreign bodies
- badly fitting hose clips

12.9.4 Installation and removal of hydraulic hose lines

Use

- only genuine **AMAZONE** replacement hoses. These hoses stand up to chemical, mechanical and thermal loads.
- hose clips made from V2A for fitting hoses, as a rule.

When installing and removing hydraulic hose lines, always observe the following information:

- Ensure cleanliness.• Always install the hydraulic hose lines to ensure the following in all operating positions
  - There is no tension, apart from the hose's own weight.
  - There is no possibility of jolting on short lengths.
  - External mechanical influences on the hydraulic hose lines are avoided.

    Use appropriate arrangements and fixing to prevent any scouring of the hoses on components or on each other. If necessary, secure hydraulic hose lines using protective covers. Cover sharp-edged components.
  - The approved bending radii may not be exceeded.

- When connecting a hydraulic hose line to moving parts, the hose length must be appropriate so that the smallest approved bending radius is not undershot over the whole area of movement and/or the hydraulic hose line is not overtensioned.
- Fix the hydraulic hose lines at the specified fixing points. There, avoid hose clips, which impair the natural movement and length changes of the hose.
- The coating of hydraulic hose lines is not permitted.

12.9.5 Fluid filter

- Oil filter for Profi-folding

Hydraulic fluid filter (Fig. 140/1) with contamination indicator (Fig. 140/2).

- Green Filter fully functional
- Red Replace filter

To remove the filter, twist off the filter cover and remove the filter.

CAUTION

Beforehand, depressurise the hydraulic system.

Otherwise there is a risk of injury from hydraulic fluid escaping at high pressure.

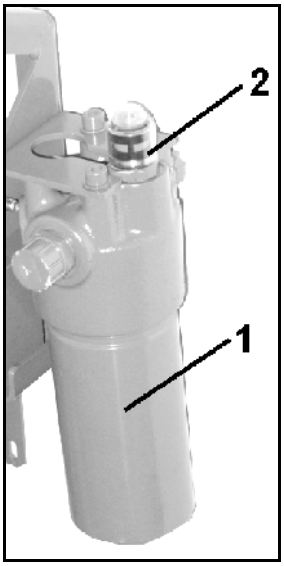

Fig. 140

After replacing the filter, press the contamination indicator back into place.

→ **Green ring again visible.**

12.9.6 Cleaning the solenoid valves

- hydraulic block for Profi-folding

To eliminate impurities from the solenoid valves, they must be flushed through. This may be necessary if deposit prevent the slider fully opening or closing.

1. Unscrew the magnetic cap (Fig. 141/1) abschrauben.
2. Remove the solenoid (Fig. 141/2) abnehmen.
3. Unscrew the valve rod (Fig. 141/3) with valve seats and clean with compressed air or hydraulic fluid

CAUTION

Beforehand, depressurise the hydraulic system.

Otherwise there is a risk of injury from hydraulic fluid escaping at high pressure.

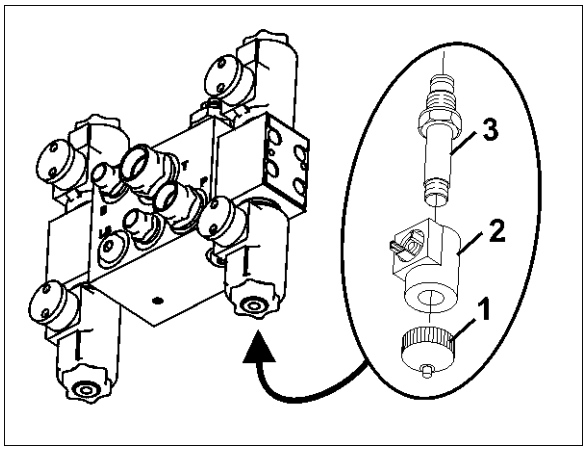

Fig. 141

12.9.7 Adjusting the hydraulic throttle valve

The operating speeds for the individual hydraulic functions are set at the factory from the valve block using the respective hydraulic throttle valves (fold/unfold sprayer boom, lock/unlock the swing compensation, etc.). However, depending on the type of tractor, it may be necessary to correct these speed settings.

The operating speed for a hydraulic function associated with a particular throttle pair can be adjusted by screwing the hexagon socket head screw on the corresponding throttle in or out.

- Reduce operating speed = screw in hexagon socket head screw.
- Increase operating speed = screw out hexagon socket head screw.

Always adjust the two throttles in a throttle pair equally when correcting the operating speed of a hydraulic function.

Folding via the tractor control unit

Fig. 142/…

(1) Hydraulic throttle valve - Height adjustment.

(2) Hydraulic throttle valve - Fold in the left boom extension.

(3) Hydraulic throttle valve - Fold in the right boom extension.

(4) Hydraulic throttle valve - Lock and unlock the swing compensation.

Fig. 143/…

(5) Hydraulic throttle valve - Fold out the boom extension.

(6) Hydraulic throttle valve - Fold in the boom extension.

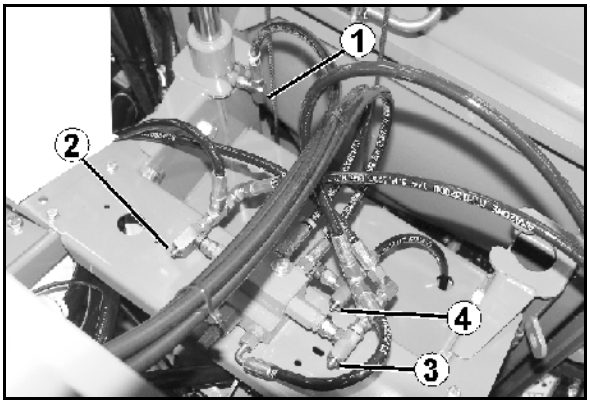

Fig. 142

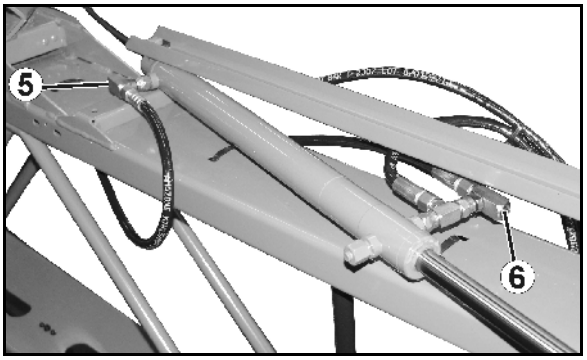

Fig. 143

Profi-folding I

Fig. 144/...

(1) Throttle - fold in the right-hand boom.

(2) Throttle - fold out the right-hand boom.

(3) Throttle - lock the swing compensation.

(4) Throttle transport safety catch.

(5) Hydraulic joints – tilt adjustment (the throttles are located on the hydraulic cylinder for tilt adjustment).

(6) Throttle - fold in the left-hand boom.

(7) Throttle - fold-out the left-hand boom.

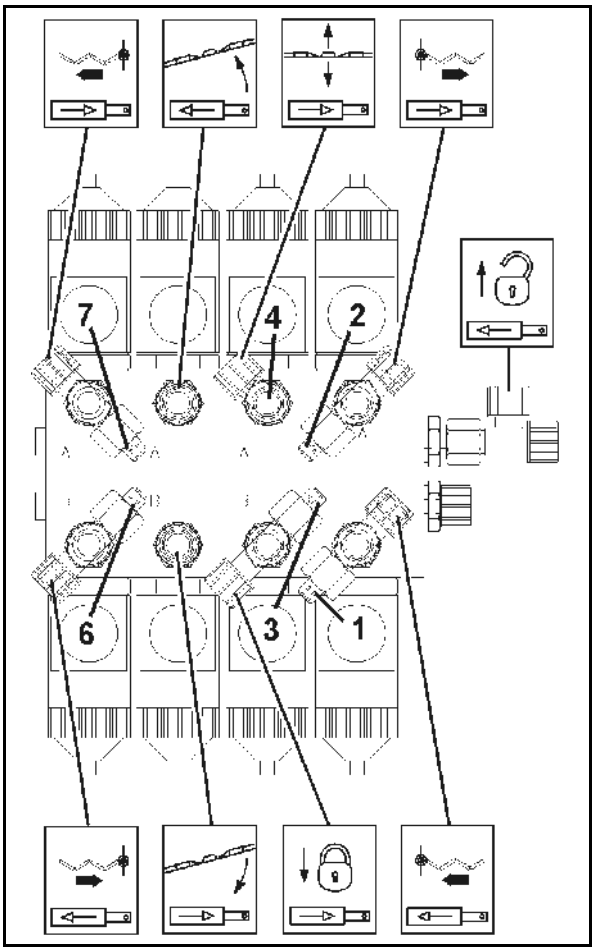

Fig. 144

Profi-folding II

Fig. 145/...

(1) Throttle - lower the right-hand boom.

(2) Throttle - raise the right-hand boom.

(3) Throttle - fold in the right-hand boom.

(4) Throttle - fold out the right-hand boom.

(5) Throttle - lock the swing compensation.

(6) Throttle transport safety catch.

(7) Hydraulic joints – tilt adjustment (the throttles are located on the hydraulic cylinder for tilt adjustment).

(8) Throttle - fold in the left-hand boom.

(9) Throttle - fold-out the left-hand boom.

(10) Throttle - lower the left-hand boom.

(11) Throttle - raise the left-hand boom.

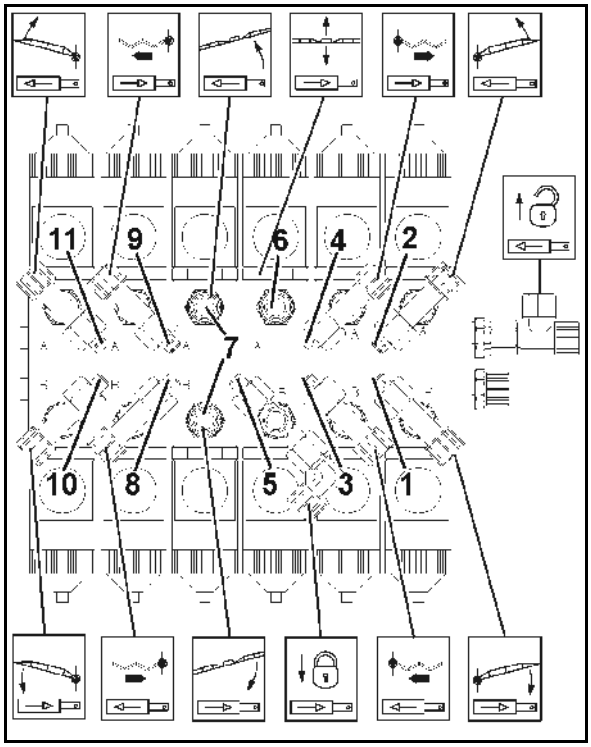

Fig. 145

12.10 Adjustments on the folded-out sprayer boom

Alignment parallel to the ground

With the sprayer boom folded out and correctly set, all the spraying nozzles must be of the same parallel distance to the ground.

If this is not the case, with the swing compensation **unlocked** align the folded-out sprayer boom by means of counterweights (Fig. 146/1). Secure the counterweights to the boom extension accordingly.

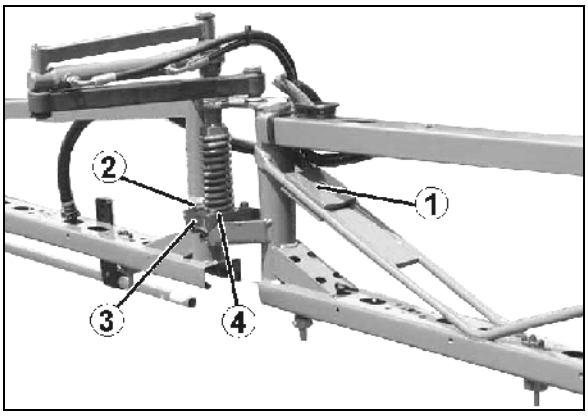

Fig. 146

Horizontal alignment

Viewed in the direction of travel, all boom sections of the sprayer boom must be flush in line. Horizontal alignment may be necessary

- after a long period of use
- or in the event of rough contact between the ground and the sprayer boom.

Inner boom section

1. Release the lock nut of the adjusting screw (Fig. 147/1).
2. Turn the adjusting screw against the stops until the inner boom is flush with the sprayer boom middle section.
3. Tighten the lock nut.

Outer boom section

1. Release the screws (Fig. 146/2) of the securing link (Fig. 146/3). The boom is aligned directly at the plastic catch (Fig. 146/4) through the slotted holes of the securing link.
2. Align the boom section.
3. Tighten the screws (Fig. 146/2).

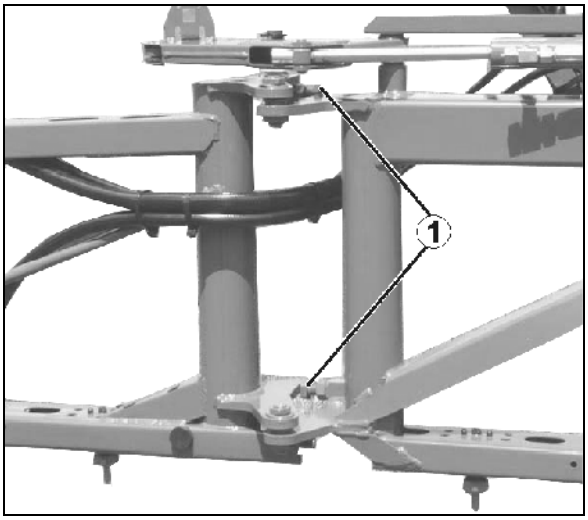

Fig. 147

12.11 Pump

12.11.1 Check the oil level

- Only use 20W30 branded oil or 15W40 multi purpose oil.
- Ensure the correct oil level. Damage may be caused both by the oil level being too low or too high.
- The read-off oil level can be averaged from the non-horizontal orientation of the pump in the hitch drawbar.

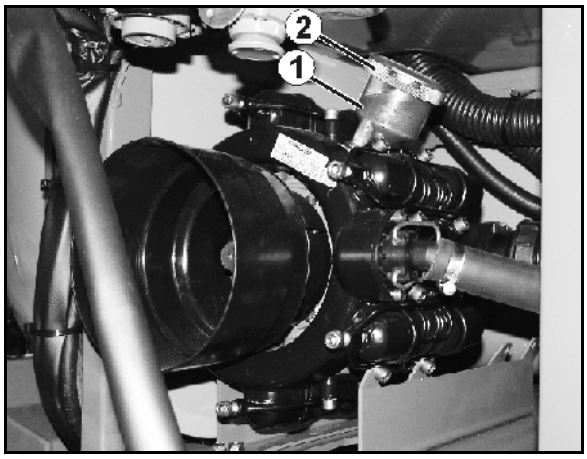

Fig. 148

1. Check whether the oil level is visible at the mark (Fig. 148/1) with the pump not running and standing on a flat surface.
2. If the oil level is not visible at the mark (Fig. 148/1), remove the lid (Fig. 148/2) and top up with oil.

12.11.2 Changing the oil

After a few operating hours, check the oil level; top up if necessary.

1. Remove the pump.
2. Remove the lid (Fig. 148/2).
3. Drain the oil.
   - 3.1 Turn the pump on its head.
   - 3.2 Rotate the drive shaft by hand until the used oil has all run out.

     The option also exists to drain the oil from the drain plug. However, with this procedure a slight oil residue remains in the pump; we therefore recommend the first approach.
4. Place the pump on an even surface.
5. Turn the drive shaft left and right alternately and slowly fill with new oil. The right quantity of oil has been reached when the oil is visible at the mark (Fig. 148/1).

12.11.3 Cleaning

After each use, thoroughly clean the pump by pumping clear fresh water for several minutes.

12.11.4 Check and replace suction and pressure valves (workshop work)

- Pay attention to the respective installation positions of the valves on the suction and pressure sides before removing the valve groups (Fig. 149/5).
- When reassembling, ensure that the valve guide (Fig. 149/9) is not damaged. Damage may cause the valves to jam.
- Always tighten the nuts (Fig. 149/1,2) in a crosswise fashion using the specified torque. Improper tightening of the screws causes warping, which results in leaks.

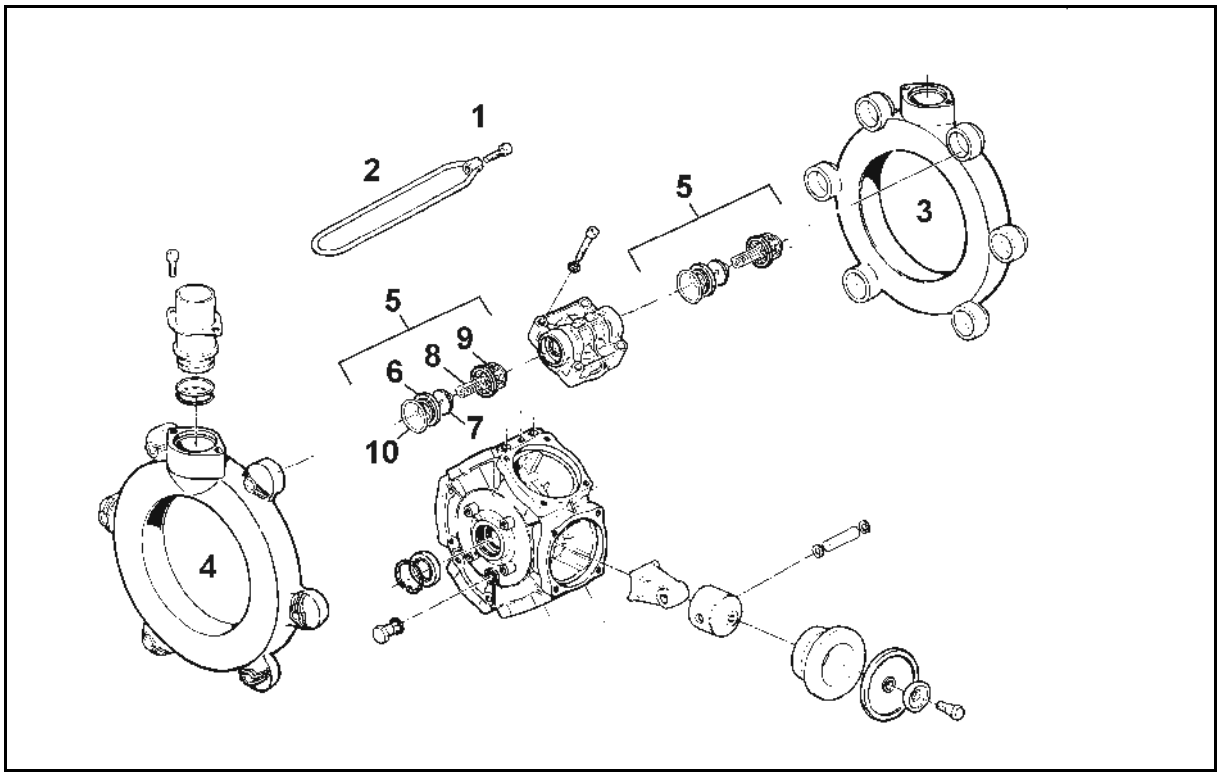

Fig. 149

1. Remove the pump.
2. Release the screws (Fig. 149/1) and remove the tensioning clamp (Fig. 149/2).
3. Remove the suction and pressure ports (Fig. 149/3 and Fig. 149/4).
4. Remove the valve groups (Fig. 149/5).
5. Check the valve seat (Fig. 149/6), valve (Fig. 149/7), valve spring (Fig. 149/8) and valve guide (Fig. 149/9) for damage or wear.
6. Remove the O-ring (Fig. 149/10).
7. Replace defective parts.
8. After testing and cleaning, fit the valve groups (Fig. 149/5).
9. Fit new O-rings (Fig. 149/10).
10. Mount the suction (Fig. 149/3) and pressure ports (Fig. 149/4) on the pump housing and fit the tensioning clamp (Fig. 149/2).
11. Tighten the screws (Fig. 149/1) crosswise to **11 Nm** torque

12.11.5 Checking and replacing piston diaphragms (workshop work)

- At least once a year, check that the piston diaphragm (Fig. 150/8) is in perfect condition by removing it.
- Pay attention to the respective installation positions of the valves on the suction and pressure sides before removing the valve groups (Fig. 150/5).
- Check and replace the piston diaphragm for each piston individually. Only remove the next piston in sequence after the currently removed piston has been completely checked and refitted.
- Always swivel the piston to be checked upwards so that the oil in the pump housing does not run out.
- As a rule, replace all piston diaphragms (Fig. 150/8), even if only one piston diaphragm distorted, punctured or porous.

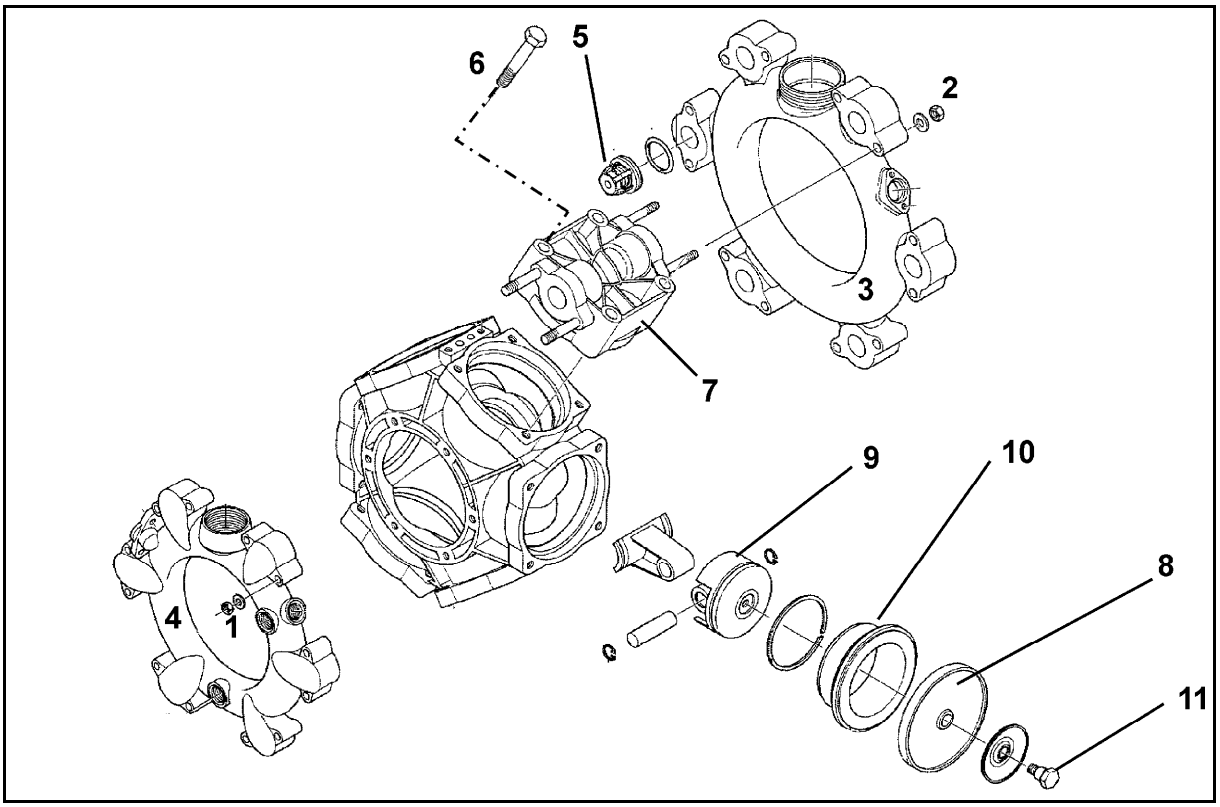

Fig. 150

Checking the piston diaphragm

1. Remove the pump.
2. Release the screws (Fig. 150/1) and remove the tensioning clamp (Fig. 150/2).
3. Remove the suction and pressure ports (Fig. 150/3, Fig. 150/4) including the valve groups (Fig. 150/5).

Pay attention to the installation position of the valves on the suction and pressure sides!

4. After removing the screws (Fig. 150/6), remove the cylinder head (Fig. 150/7).
5. Check the piston diaphragm (Fig. 150/8).

Replacing the piston diaphragm

- Ensure the correct position for the recesses and/or holes on the hydraulic cylinders.
- Secure the piston diaphragm (Fig. 150/8) with a washer disc and a screw (Fig. 150/11) on the piston (Fig. 150/9), so that the rim shows on the cylinder head side (Fig. 150/7).
- Always tighten the nuts (Fig. 150/1,2) in a crosswise fashion using the specified torque. Improper tightening of the screws causes warping, which results in leaks.

1. Undo the screw (Fig. 150/11) and remove the piston diaphragm (Fig. 150/8) and the washer disc from the piston (Fig. 150/9).
2. If the piston diaphragm has been punctured, drain the oil/spray liquid mixture from the pump housing.
3. Remove the hydraulic cylinder (Fig. 150/10) from the pump housing.
4. Clean the pump housing by flushing it thoroughly with diesel oil or paraffin.
5. Clean all sealing faces.
6. Insert the cylinder (Fig. 150/10) back into the pump housing.
7. Fit the piston diaphragm (Fig. 150/8).
8. Mount the cylinder head (Fig. 150/7) on the pump housing and tighten the screws (Fig. 150/6) an equal amount in a crosswise fashion.

   Use adhesive for medium tight screw connections for the screw connection!
9. After testing and cleaning, fit the valve groups (Fig. 150/5).
10. Insert new O-rings.
11. Mount the suction (Fig. 150/3) and pressure port (Fig. 150/4) on the pump housing.
12. Tighten the nuts (Fig. 150/1,2) in a crosswise fashion using a torque of **11 Nm**.

12.12 Calibrate the flow meter

For information on this, observe the **AMATRON+** operating manual; section "Impulses per litre".

12.13 Field sprayer calibration

Test the field sprayer by carrying out calibration

- **before the start of the season.**
- **each time a nozzle is changed.**
- **to check the setting information in the spray tables.**
- **in the case of deviations between the actual and required spray rate [l/ha].**

Any deviations between the actual and required spray rate [l/ha] may be caused by:

- the difference between the actual operational speed and that indicated on the tractor meter and/or
- natural wear to the spraying nozzles.

Calibration equipment:

(1) Quick-check beaker

(2) Stopwatch

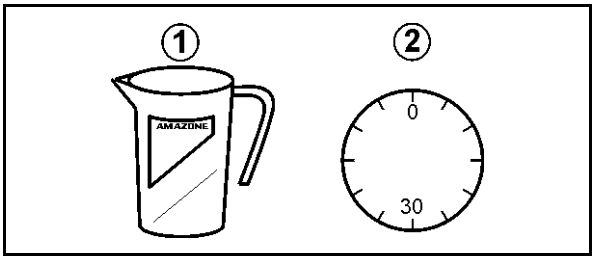

Determining the actual spray rate while stationary via the individual nozzle output

Determine the nozzle output from at least 3 different nozzles. To do this, check one nozzle on the left boom, one on the right boom and one in the middle of the sprayer boom as described below.

1. Determine the precise spray rate [l/ha] required for the crop protection measure.
2. Determine the required spray pressure.
3. **AMATRON+ / AMASPRAY+**:
   3.1 Enter the required spray rate into the operating terminal.
   3.2 Enter the permissible spray pressure range for the spraying nozzles fitted to the sprayer boom on the operating terminal.
   3.3 Switch the operating terminal from AUTOMATIC mode over to the MANUAL mode.
4. Fill the spray liquid tank with water.
5. Switch on the agitator.
6. Manually set the required spray pressure.
7. Switch on spraying and check that all nozzles are functioning perfectly.
8. Calculate the individual nozzle output [l/min] at several nozzles.
   To do so, hold the quick-check beaker under a nozzle for precisely 30 seconds.
9. Switch off spraying.
10. Calculate the average individual nozzle output [l/ha].

- Using the table on the quick-check beaker.
- By calculation.
- Using the spray table.

Example:

Nozzle size	'06'
Intended operational speed	7 km/h
Nozzle output on the left boom:	0.85 l/30s
Nozzle output in the centre	0.84 l/30s
Nozzle output on the right boom:	0.86 l/30s
Calculated average value:	**0.85 l/30s → 1.7 l/min**

1. Calculate the individual nozzle output [l/ha] using the quick-check beaker

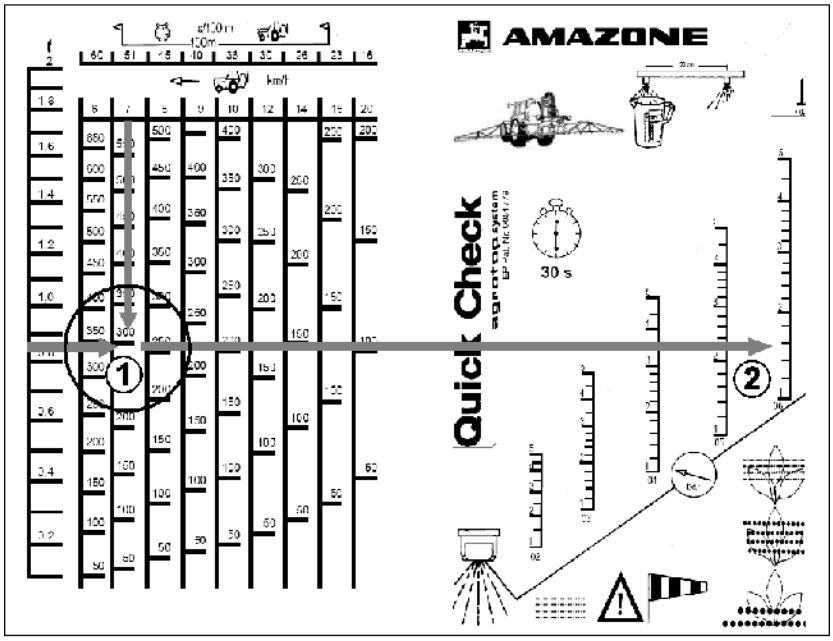

(1) →calculated spread rate 290 l/ha
(2) →calculated spray pressure 1.6 bar

2. Calculate individual nozzle output [l/ha]

$$\frac{d\ [l/min]\ \times\ 1200}{e\ [km/h]} = \text{Spread rate}[l/ha]$$

- d: Nozzle output (calculated average value) [l/min]
- e: Operational speed [km/h]

$$\frac{1.7\ [l/min]\ \times\ 1200}{7\ [km/h]} = 291\ [l/ha]$$

3. Read the individual nozzle output [l/ha] from the spray table

From the spray table (see page 214):

→ Spread rate 291 l/ha
→ Spray pressure 1.6 bar

If the calculated values for spread rate/spray pressure do not agree with the set values:

- Calibrate the flow meter (see the operating manual for the operator control terminal)
- Check all nozzles for wear and blockages.

12.14 Nozzles

From time to time, check the seating of the slider (Fig. 151/7).

- To do this, insert the slider into the nozzle body (Fig. 151/2) as far as possible using moderate thumb pressure.

Do not insert the slider up to the stop when in a new condition under any circumstances.

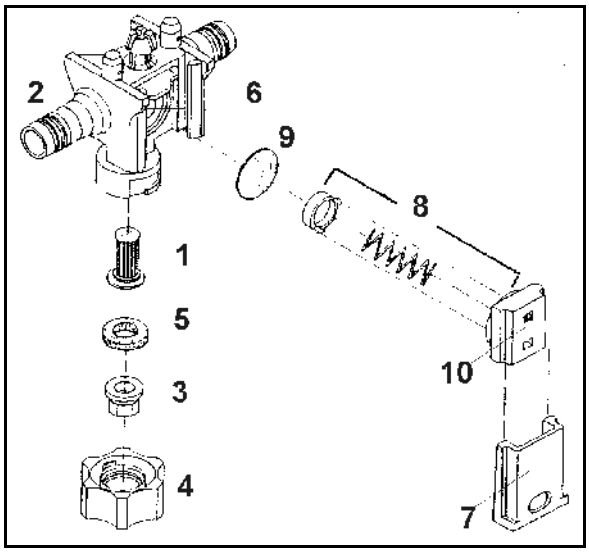

Fig. 151

12.14.1 Fitting the nozzle

1. Insert the nozzle filter (Fig. 151/1) into the nozzle body (Fig. 151/2) from below.
2. Insert the nozzle (Fig. 151/3) into the bayonet nut (Fig. 151/4)

Different coloured bayonet nuts are available for the different nozzles.

3. Insert the rubber seal (Fig. 151/5) above the nozzle.
4. Press a rubber seal into the seat for the bayonet nut.
5. Position a bayonet nut on the bayonet connection.
6. Screw on the bayonet nut up to the stop.

12.14.2 Removing the diaphragm valve if the nozzle is dripping

Deposits on the diaphragm seat (Fig. 151/6) can cause the nozzles to drip after the boom is shut-off. If this occurs, clean the diaphragm in question as follows:

1. Pull the slider (Fig. 151/7) out of the nozzle body (Fig. 151/2) towards the bayonet nut.
2. Remove the spring element (Fig. 151/8) and the diaphragm (Fig. 151/9).
3. Clean the diaphragm seat (Fig. 151/6).
4. Reassembly occurs in the reverse sequence.

Note the correct orientation for installing the spring element. For installation, the stepped, upwards-sloping edges on the left and right of the housing of the spring element (Fig. 151/10) must slope up in the direction of the boom profile.

12.15 Hose filters

- Clean the line filter (Fig. 152/1).
- Replace defective filter inserts.

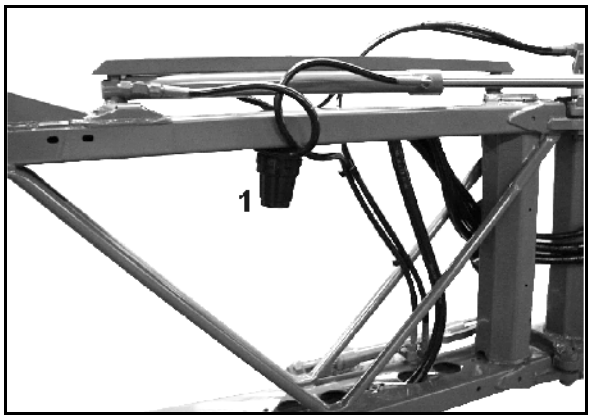

Fig. 152

12.16 Instructions on testing the field sprayer

- Only authorised centres are permitted to carry out spray tests.
- According to law, a spray test must be carried out:
  - 6 months after commissioning (if not performed at time of purchase) at the latest, then
  - every two years thereafter.

Field sprayer test kit (special equipment), order no.: 935680

Fig. 153/...

(1) Push-on cap (Order no.: 913 954) and connector (Order no.: ZF195)

(2) Flow meter connection (Order no.: 919967)

(3) Pressure gauge connection (Order no.: 7107000)

(4) O-Ring (Order no.: FC122)

(5) Hose connection (Order no.: GE095)

(6) Sleeve nut (Order no.: GE021)

(7) Hose clip (Order no.: KE006)

(8) Plug-in socket (Order no.: 919345)

(9) O-Ring (Order no.: FC112)

(10) Turned socket (Order no.: 935679)

(11) Securing plug (Order no.: ZF195)

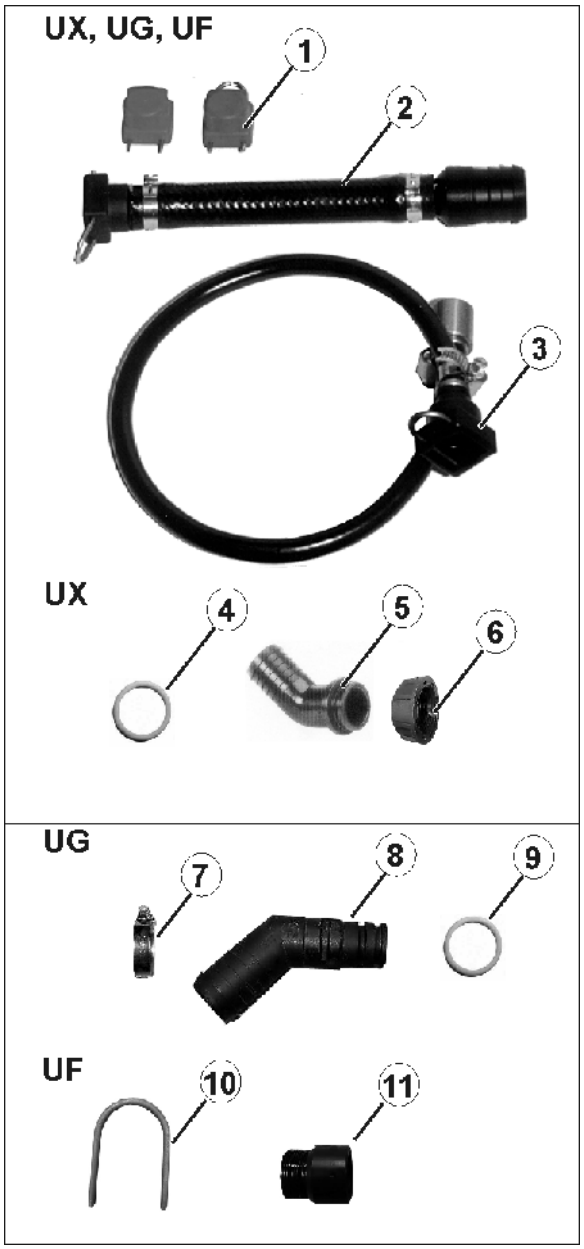

Fig. 153

Pump test - testing pump performance (delivery capacity, pressure)

Connect the test kit to the pump pressure connection (Fig. 154/1).

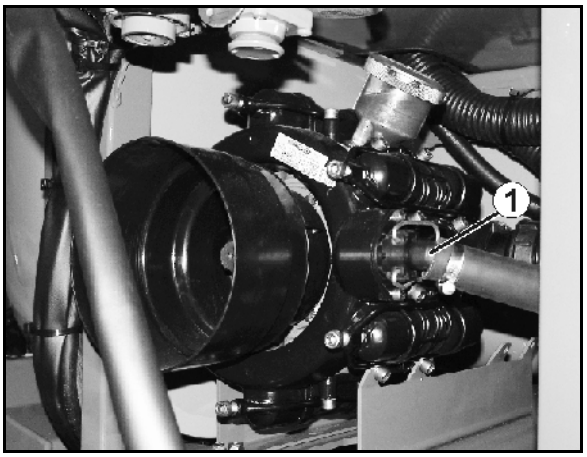

Fig. 154

Flow meter test

1. Remove all spray lines from the part width section valves (Fig. 155/1).
2. Connect the flow meter connection (Fig. 153/2) to a part width section valve and connect to the tester.
3. Block the connections for the remaining part width section valves using blanks (Fig. 153/1).
4. Switch on spraying.

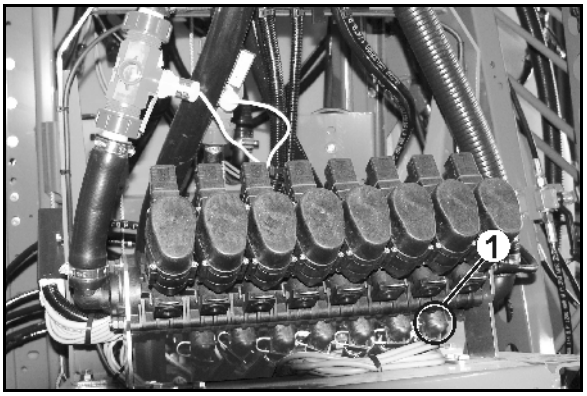

Fig. 155

Pressure gauge test

1. Remove a spray line from a part width section valve.
2. Connect the pressure gauge connection (Fig. 153/3) to a part width section valve with the help of the turned socket.
3. Screw the check gauge 1/4 of an inch into the inside thread.
4. Switch on spraying.

12.17 Electric lighting system

Replacement of light bulbs:

1. Unscrew the safety glass.
2. Remove the defective bulb.
3. Insert the replacement bulb (note the correct voltage and wattage).
4. Insert and screw on the sight glass.

12.18 Screw tightening torques

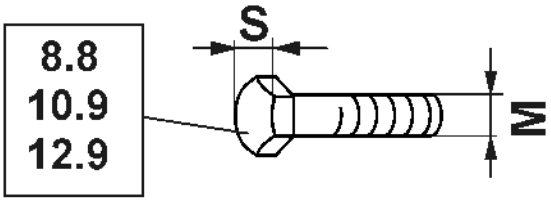

M	S	Nm 8.8	Nm 10.9	Nm 12.9
M 8	13	25	35	41
M 8x1		27	38	41
M 10	16 (17)	49	69	83
M 10x1		52	73	88
M 12	18 (19)	86	120	145
M 12x1,5		90	125	150
M 14	22	135	190	230
M 14x1,5		150	210	250
M 16	24	210	300	355
M 16x1,5		225	315	380
M 18	27	290	405	485
M 18x1,5		325	460	550
M 20	30	410	580	690
M 20x1,5		460	640	770
M 22	32	550	780	930
M 22x1,5		610	860	1050
M 24	36	710	1000	1200
M 24x2		780	1100	1300
M 27	41	1050	1500	1800
M 27x2		1150	1600	1950
M 30	46	1450	2000	2400
M 30x2		1600	2250	2700

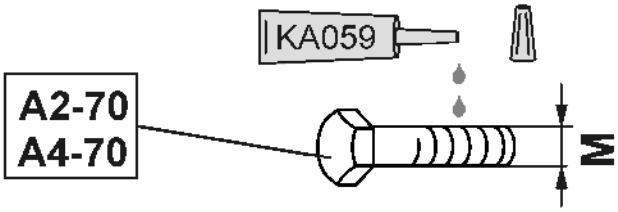

M	M4	M5	M6	M8	M10	M12	M14	M16	M18	M20	M22	M24
Nm	2,3	4,6	7,9	19,3	39	66	106	162	232	326	247	314

12.19 Disposing of the field sprayer

Carefully clean the whole field sprayer (inside and out) before disposing of the field sprayer.

The following components are eligible for energy recovery*: spray liquid tank, induction bowl, flushing water tank, fresh water tank, hoses and plastic fittings.

Metal parts can be scrapped.

Follow the statutory requirements for each individual material.

* Energy recovery

is the process of reclaiming the energy contained in plastics by burning them and using the energy released to generate electricity and/or steam or to supply process heat. Energy recovery is suitable for mixed and contaminated plastics, in particular for any plastics which have come into contact with pollutants.

13 Spray table

13.1 Flat-fan, anti-drift, injector and airmix nozzles, spraying height 50 cm

- The spray rates [l/ha] listed in the spray tables are only valid for water. To convert the spray rates given into AUS, multiply these by 0.88 and, for NP solutions, by 0.85.
- Fig. 156 helps with the selection of the right nozzle type. The nozzle type is determined by
  - the intended operational speed,
  - the required spray rate and
  - the required atomisation characteristic (fine, medium or coarse-dropped) of the crop protection agent used for the crop protection measure.
- Fig. 157 is used to
  - determine the nozzle size.
  - determine the required spray pressure.
  - determine the required individual nozzle output for calibrating the field sprayer.

Permissible pressure ranges for different nozzle types and sizes

Nozzle type	Manufacturer	Permissible pressure range [bar]	
		min. pressure	max. pressure
XRC	TeeJet	1	5
AD	Lechler	1,5	5
Air Mix	agrotop	1	6
IDK / IDKN	Lechler	1	6
ID / IS		2	8
IDN		2	8
AI	TeeJet	2	8
TTI		1	7
AVI Twin	agrotop	2	8
TD Hi Speed	agrotop	2	10

For further information about the nozzle characteristics, see the nozzle manufacturer's website.

www.agrotop.com / www.lechler-agri.de / www.teejet.com

Selecting the nozzle type

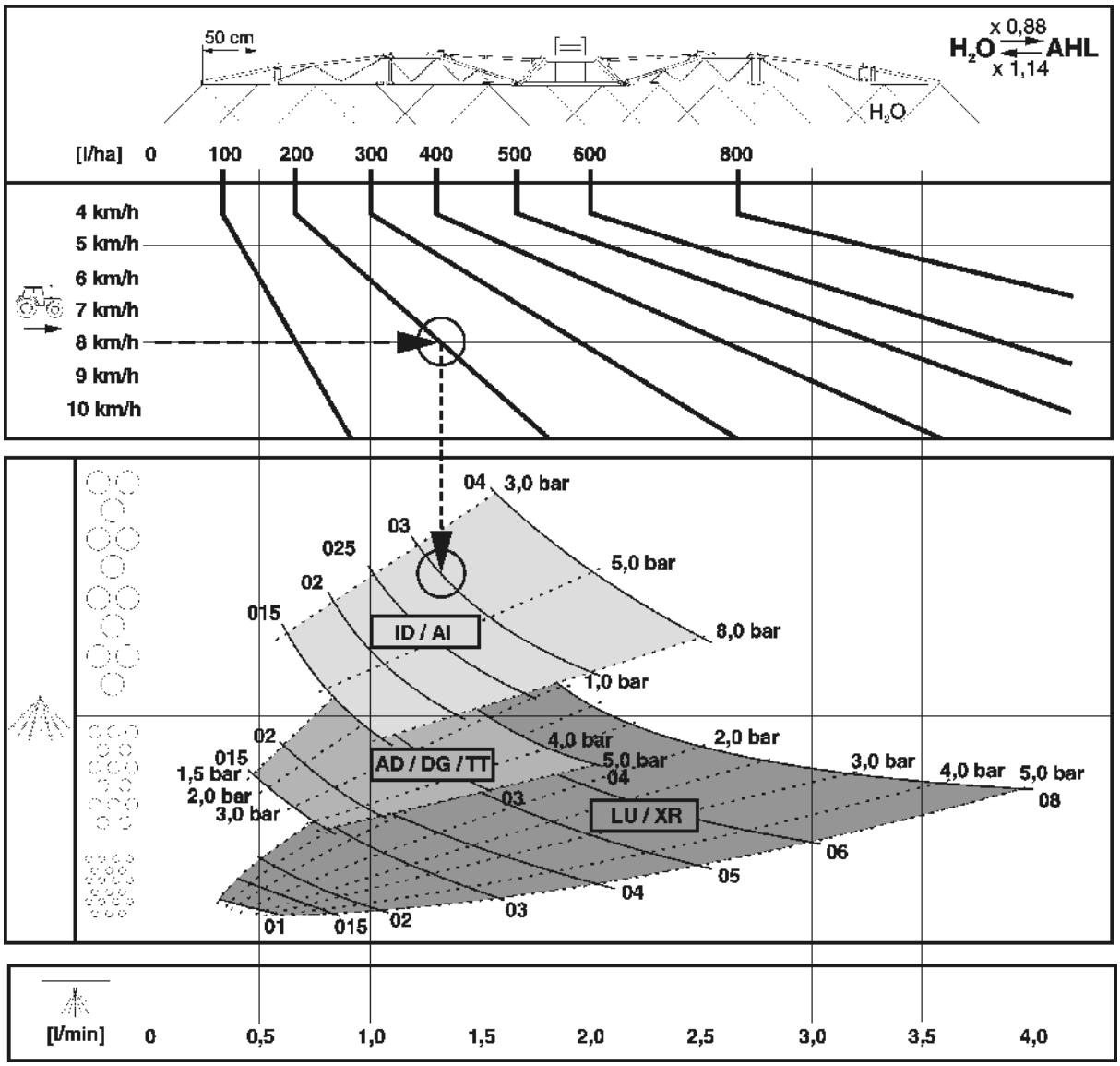

Fig. 156

Example:

Required spray rate:	**200 l/ha**
Intended operational speed:	**8 km/h**
Required atomisation characteristic for the crop protection measure:	**coarse-dropped** (fine drifting)
Required nozzle type:	?
Required nozzle size:	?
Required spray pressure:	? bar
Required individual nozzle output for calibrating the field sprayer:	? l/min

Determining the nozzle type, nozzle size, spray pressure and individual nozzle output

1. Determine the working point for the required spray rate (**200 l/ha**) and the intended operational speed (**8 km/h**).
2. At the working point, trace a line down the table. Depending on the position of the working point, this line will run through the cells for various nozzle types.
3. Select the best nozzle type for the crop protection measure in question, with reference to the required atomisation characteristic (fine, medium or coarse-dropped).

→ Nozzle choice for the example given above:

→ Nozzle type: **AI or ID**

4. Go to the spray table (**Fig. 157**).
5. In the column with the intended operational speed (**8 km/h**), find the required spray rate (**200 l/ha**) or a figure which is as close as possible to the required spray rate (in this case, for example, **195 l/ha**).
6. In the line with the required spray rate (**195 l/ha**),
   - read the nozzle sizes in question. Select a suitable nozzle size (e.g.**'03'**).
   - where the nozzle size column intersects with the selected nozzle size, read the required spray pressure (e.g. **3.7 bar**).
   - read the required individual nozzle output (**1.3 l/min**) for calibrating the field sprayer.

Required nozzle type:	**AI / ID**
Required nozzle size:	**'03'**
Required spray pressure:	**3.7 bar**
Required individual nozzle output for calibrating the field sprayer:	**1.3 l/min**

50 cm

H_2O — l/ha

6	6,5	7	7,5	8	8,5	9	10	11	12	14	16	l/min	bar 015	02	025	03	04	05	06	08
← km/h																				
80	74	69	64	60	56	53						0,4	1,4							
100	92	86	80	75	71	67	60	55				0,5	2,2	1,2						
120	111	103	96	90	85	80	72	65	60	51		0,6	3,1	1,8	1,1					
140	129	120	112	105	99	93	84	76	70	60	53	0,7	4,2	2,4	1,5	1,1				
160	148	137	128	120	113	107	96	87	80	69	60	0,8	5,5	3,1	2,0	1,4				
180	166	154	144	135	127	120	108	98	90	77	68	0,9	7,0	4,0	2,5	1,8	1,0			
200	185	171	160	150	141	133	120	109	100	86	75	1,0		4,9	3,1	2,2	1,2			
220	203	189	176	165	155	147	132	120	110	94	83	1,1		5,9	3,7	2,7	1,5	1,0		
240	222	206	192	180	169	160	144	131	120	103	90	1,2		7,0	4,4	3,2	1,8	1,1		
260	240	223	208	195	184	173	156	142	130	111	98	1,3			5,2	3,7	2,1	1,3	1,0	
280	259	240	224	210	198	187	168	153	140	120	105	1,4			6,0	4,3	2,4	1,6	1,1	
300	277	257	240	225	212	200	180	164	150	129	113	1,5			6,9	5,0	2,8	1,8	1,2	
320	295	274	256	240	226	213	192	175	160	137	120	1,6				5,7	3,2	2,0	1,4	
340	314	291	272	255	240	227	204	185	170	146	128	1,7				6,4	3,6	2,3	1,6	
360	332	309	288	270	254	240	216	196	180	154	135	1,8				7,2	4,0	2,6	1,8	1,0
380	351	326	304	285	268	253	228	207	190	163	143	1,9					4,5	2,9	2,0	1,1
400	369	343	320	300	282	267	240	218	200	171	150	2,0					4,9	3,2	2,2	1,2
420	388	360	336	315	297	280	252	229	210	180	158	2,1					5,4	3,5	2,4	1,4
440	406	377	352	330	311	293	264	240	220	189	165	2,2					6,0	3,8	2,7	1,5
460	425	394	368	345	325	307	276	251	230	197	173	2,3					6,5	4,2	2,9	1,6
480	443	411	384	360	339	320	288	262	240	206	180	2,4					7,1	4,6	3,2	1,8
500	462	429	400	375	353	333	300	273	250	214	188	2,5						5,0	3,4	1,9
520	480	446	416	390	367	347	312	284	260	223	195	2,6						5,4	3,7	2,1
540	499	463	432	405	381	360	324	295	270	231	203	2,7						5,8	4,0	2,3
560	517	480	448	420	395	373	336	305	280	240	210	2,8						6,2	4,3	2,4
580	535	497	464	435	409	387	348	316	290	249	218	2,9						6,7	4,6	2,6
600	554	514	480	450	424	400	360	327	300	257	225	3,0						7,1	5,0	2,8
620	572	531	496	465	438	413	372	338	310	266	233	3,1								3,0
640	591	549	512	480	452	427	384	349	320	274	240	3,2								3,2
660	609	566	528	495	466	440	396	360	330	283	248	3,3								3,4
680	628	583	544	510	480	453	408	371	340	291	255	3,4								3,6
700	646	600	560	525	494	467	420	382	350	300	263	3,5								3,8
720	665	617	576	540	508	480	432	393	360	309	270	3,6								4,0
740	683	634	592	555	522	493	444	404	370	318	278	3,7								4,3
x 0,88			608	570	537	507	456	415	380	326	285	3,8								4,5
$H_2O \rightleftarrows$ AHL			624	585	551	520	468	425	390	335	293	3,9								4,7
x 1,14			640	600	565	533	480	436	400	343	300	4,0								5,0

LU / XR: 1 – 5 bar
AD: 1,5 – 6 bar
ID / AI: 2 – 8 bar
IDK / Air Mix: 1 – 6 bar
TTI: 1 – 7 bar

ME 735

Fig. 157

13.2 Spraying nozzles for liquid manure

Nozzle type	Manufacturer	Permissible pressure range [bar]	
		min. pressure	max. pressure
3-jet	agrotop	2	8
7-hole	TeeJet	1.5	4
FD	Lechler	1.5	4
Drag hose	**AMAZONE**	1	4

13.2.1 Spray table for three-ray nozzles, spraying height 120 cm

AMAZONE - spray table for three-ray nozzles (yellow)

Pressure	Nozzle output		AUS spray rate (l/ha) / km/h								
	Water	AUS	6	7	8	9	10	11	12	14	16
(bar)	(l/min)										
1.0	0.36	0.32	64	55	48	43	39	35	32	28	24
1.2	0.39	0.35	69	60	52	47	42	38	35	30	26
1.5	0.44	0.39	78	67	59	53	47	43	39	34	30
1.8	0.48	0.42	85	73	64	57	51	47	43	37	32
2.0	0.50	0.44	88	75	66	59	53	48	44	38	33
2.2	0.52	0.46	92	78	69	62	55	50	46	39	35
2.5	0.55	0.49	98	84	74	66	57	54	49	52	37
2.8	0.58	0.52	103	88	77	69	62	56	52	44	39
3.0	0.60	0.53	106	91	80	71	64	58	53	46	40

AMAZONE - spray table for three-ray nozzles (red)

Pressure	Nozzle output		AUS spray rate (l/ha) / km/h								
	Water	AUS	6	7	8	9	10	11	12	14	16
(bar)	(l/min)										
1.0	0.61	0.54	108	93	81	72	65	59	54	47	41
1.2	0.67	0.59	118	101	88	78	70	64	59	51	44
1.5	0.75	0.66	132	114	99	88	79	72	66	57	50
1.8	0.79	0.69	138	119	104	92	83	76	69	60	52
2.0	0.81	0.71	142	122	107	95	85	78	71	61	54
2.2	0.84	0.74	147	126	111	98	88	80	74	63	56
2.5	0.89	0.78	155	133	117	104	93	84	78	67	59
2.8	0.93	0.82	163	140	122	109	98	87	82	70	61
3.0	0.96	0.84	168	144	126	112	101	92	84	72	63

AMAZONE - spray table for three-ray nozzles (blue)

Pres-sure	Nozzle output		AUS spray rate (l/ha) / km/h								
	Water	AUS	6	7	8	9	10	11	12	14	16
(bar)	(l/min)										
1.0	0.86	0.76	152	130	114	101	91	83	76	65	57
1.2	0.94	0.83	166	142	124	110	99	91	83	71	62
1.5	1.05	0.93	186	159	140	124	112	102	93	80	70
1.8	1.11	0.98	196	167	147	131	117	107	98	84	74
2.0	1.15	1.01	202	173	152	135	121	110	101	87	76
2.2	1.20	1.06	212	182	159	141	127	116	106	91	80
2.5	1.26	1.12	224	192	168	149	135	122	112	96	84
2.8	1.32	1.17	234	201	176	156	141	128	117	101	88
3.0	1.36	1.20	240	206	180	160	144	131	120	103	90

AMAZONE - spray table for three-ray nozzles (white)

Pres-sure	Nozzle output		AUS spray rate (l/ha) / km/h								
	Water	AUS	6	7	8	9	10	11	12	14	16
(bar)	(l/min)										
1.0	1.16	1.03	206	177	155	137	124	213	103	89	78
1.2	1.27	1.12	224	192	168	149	134	222	112	96	84
1.5	1.42	1.26	252	217	190	168	151	138	126	109	95
1.8	1.56	1.38	277	237	207	184	166	151	139	119	104
2.0	1.64	1.45	290	249	217	193	174	158	145	125	109
2.2	1.73	1.54	307	263	230	204	185	168	154	132	115
2.5	1.84	1.62	325	279	244	216	195	178	163	140	122
2.8	1.93	1.71	342	293	256	228	205	187	171	147	128
3.0	2.01	1.78	356	305	267	237	214	194	178	153	134

13.2.2 Spray table for 7-hole nozzles

AMAZONE spray table for 7-hole nozzle SJ7-02VP (yellow)

Pressure	Nozzle output per nozzle		AUS spray rate (l/ha) / km/h								
	Water	AUS	6	7	8	9	10	11	12	14	16
(bar)	(l/min)										
1.5	0.55	0.49	98	84	74	65	59	53	49	42	37
2.0	0.64	0.57	114	98	86	76	68	62	57	49	43
2.5	0.72	0.64	128	110	96	85	77	70	64	55	48
3.0	0.80	0.71	142	122	107	95	85	77	71	61	53
3.5	0.85	0.75	150	129	113	100	90	82	75	64	56
4.0	0.93	0.82	164	141	123	109	98	89	82	70	62

AMAZONE spray table for 7-hole nozzle SJ7-03VP (blue)

Pressure	Nozzle output per nozzle		AUS spray rate (l/ha) / km/h								
	Water	AUS	6	7	8	9	10	11	12	14	16
(bar)	(l/min)										
1.5	0.87	0.77	154	132	116	103	92	84	77	66	58
2.0	1.00	0.88	176	151	132	117	106	96	88	75	66
2.5	1.10	0.97	194	166	146	129	116	106	97	83	73
3.0	1.18	1.04	208	178	156	139	125	113	104	89	78
3.5	1.27	1.12	224	192	168	149	134	122	112	96	84
4.0	1.31	1.16	232	199	174	155	139	127	116	99	87

AMAZONE spray table for 7-hole nozzle SJ7-04VP (red)

Pressure	Nozzle output per nozzle		AUS spray rate (l/ha) / km/h								
	Water	AUS	6	7	8	9	10	11	12	14	16
(bar)	(l/min)										
1.5	1.17	1.04	208	178	156	139	125	113	104	89	78
2.0	1.33	1.18	236	202	177	157	142	129	118	101	89
2.5	1.45	1.28	256	219	192	171	154	140	128	110	96
3.0	1.55	1.37	274	235	206	183	164	149	137	117	103
3.5	1.66	1.47	295	253	221	196	177	161	147	126	110
4.0	1.72	1.52	304	261	228	203	182	166	152	130	114

AMAZONE spray table for 7-hole nozzle SJ7-05VP (brown)

Pressure	Nozzle output per nozzle		AUS spray rate (l/ha) / km/h								
	Water	AUS	6	7	8	9	10	11	12	14	16
(bar)	(l/min)										
1.5	1.49	1.32	264	226	198	176	158	144	132	113	99
2.0	1.68	1.49	298	255	224	199	179	163	149	128	112
2.5	1.83	1.62	324	278	243	216	194	177	162	139	122
3.0	1.95	1.73	346	297	260	231	208	189	173	148	130
3.5	2.11	1.87	374	321	281	249	224	204	187	160	140
4.0	2.16	1.91	382	327	287	255	229	208	191	164	143

AMAZONE spray table for 7-hole nozzle SJ7-06VP (grey)

Pressure	Nozzle output per nozzle		AUS spray rate (l/ha) / km/h								
	Water	AUS	6	7	8	9	10	11	12	14	16
(bar)	(l/min)										
1.5	1.77	1.57	314	269	236	209	188	171	157	135	118
2.0	2.01	1.78	356	305	267	237	214	194	178	153	134
2.5	2.19	1.94	388	333	291	259	233	212	194	166	146
3.0	2.35	2.08	416	357	312	277	250	227	208	178	156
4.0	2.61	2.31	562	396	347	308	277	252	231	198	173

AMAZONE spray table for 7-hole nozzle SJ7-08VP (white)

Pressure	Nozzle output per nozzle		AUS spray rate (l/ha) / km/h								
	Water	AUS	6	7	8	9	10	11	12	14	16
(bar)	(l/min)										
1.5	2.28	2.02	404	346	303	269	242	220	202	173	152
2.0	2.66	2.35	470	403	353	313	282	256	235	201	176
2.5	2.94	2.60	520	446	390	347	312	284	260	223	195
3.0	3.15	2.79	558	478	419	372	335	304	279	239	209
4.0	3.46	3.06	612	525	459	408	367	334	306	262	230

13.2.3 Spray table for FD nozzles

AMAZONE spray table for FD-04 nozzle

Druck	Düsenausstoß pro Düse		Aufwandmenge AHL (l/ha) / km/h								
	Wasser	AHL	6	7	8	9	10	11	12	14	16
(bar)	(l/min)										
1,5	1,13	1,00	200	171	150	133	120	109	100	86	75
2,0	1,31	1,15	230	197	173	153	138	125	115	99	86
2,5	1,46	1,29	258	221	194	172	155	141	129	111	97
3,0	1,60	1,41	282	241	211	188	169	154	141	121	106
4,0	1,85	1,63	326	279	245	217	196	178	163	140	122

AMAZONE spray table for FD-05 nozzle

Druck	Düsenausstoß pro Düse		Aufwandmenge AHL (l/ha) / km/h								
	Wasser	AHL	6	7	8	9	10	11	12	14	16
(bar)	(l/min)										
1,5	1,41	1,24	248	213	186	165	149	135	124	106	93
2,0	1,63	1,44	288	247	216	192	173	157	144	123	108
2,5	1,83	1,61	322	276	242	215	193	176	161	138	121
3,0	2,00	1,76	352	302	264	235	211	192	176	151	132
4,0	2,31	2,03	406	348	305	271	244	221	203	174	152

AMAZONE spray table for FD-06 nozzle

Pressure	Nozzle output per nozzle		AUS spray rate (l/ha) / km/h								
	Water	AUS	6	7	8	9	10	11	12	14	16
(bar)	(l/min)										
1.5	1.70	1.49	298	255	224	199	179	163	149	128	112
2.0	1.96	1.72	344	295	258	229	206	188	172	147	129
2.5	2.19	1.93	386	331	290	257	232	211	193	165	145
3.0	2.40	2.11	422	362	317	282	253	230	211	181	158
4.0	2.77	2.44	488	418	366	325	293	266	244	209	183

AMAZONE spray table for FD-08 nozzle

Pressure	Nozzle output per nozzle		AUS spray rate (l/ha) / km/h								
	Water	AUS	6	7	8	9	10	11	12	14	16
(bar)	(l/min)										
1.5	2.26	1.99	398	341	299	265	239	217	199	171	149
2.0	2.61	2.30	460	394	345	307	276	251	230	197	173
2.5	2.92	2.57	514	441	386	343	308	280	257	220	193
3.0	3.20	2.82	563	483	422	375	338	307	282	241	211
4.0	3.70	3.25	650	557	488	433	390	355	325	279	244

AMAZONE spray table for FD-10 nozzle

Pressure	Nozzle output per nozzle		AUS spray rate (l/ha) / km/h								
	Water	AUS	6	7	8	9	10	11	12	14	16
(bar)	(l/min)										
1.5	2.83	2.49	498	427	374	332	299	272	249	214	187
2.0	3.27	2.88	576	494	432	384	345	314	288	246	216
2.5	3.65	3.21	642	551	482	429	385	350	321	275	241
3.0	4.00	3.52	704	604	528	469	422	384	352	302	264
4.0	4.62	4.07	813	697	610	542	488	444	407	348	305

13.2.4 Spray table für drag hose unit

AMAZONE spray table for dosing disc 4916-26, (dia. 0.65 mm)

Pres-sure	Nozzle output per dosing disc		AUS spray rate (l/ha) / km/h								
	Water	AUS	6	7	8	9	10	11	12	14	16
(bar)	(l/min)										
1.0	0.20	0.18	71	61	53	47	43	37	36	31	27
1.2	0.22	0.19	78	67	58	52	47	43	39	34	29
1.5	0.24	0.21	85	73	64	57	51	47	43	37	32
1.8	0.26	0.23	92	79	69	61	55	50	46	40	35
2.0	0.28	0.25	99	85	74	66	60	54	50	43	37
2.2	0.29	0.26	103	88	77	68	62	56	52	44	39
2.5	0.31	0.27	110	94	82	73	66	60	55	47	41
2.8	0.32	0.28	113	97	85	76	68	62	57	49	43
3.0	0.34	0.30	120	103	90	80	72	66	60	52	45
3.5	0.36	0.32	127	109	96	85	77	70	64	55	48
4.0	0.39	0.35	138	118	104	92	83	76	69	59	52

AMAZONE spray table with dosing disc 4916-32, (dia. 0.8 mm)

Pres-sure	Nozzle output per dosing disc		AUS spray rate (l/ha) / km/h								
	Water	AUS	6	7	8	9	10	11	12	14	16
(bar)	(l/min)										
1.0	0.31	0.27	110	94	82	73	66	60	55	47	41
1.2	0.34	0.30	120	103	90	80	72	66	60	52	45
1.5	0.38	0.34	135	115	101	90	81	74	68	58	51
1.8	0.41	0.36	145	124	109	97	87	79	73	62	55
2.0	0.43	0.38	152	130	114	101	92	83	76	65	57
2.2	0.45	0.40	159	137	119	106	96	87	80	69	60
2.5	0.48	0.42	170	146	127	113	102	93	85	73	64
2.8	0.51	0.45	181	155	135	120	109	98	91	78	68
3.0	0.53	0.47	188	161	141	125	113	103	94	81	71
3.5	0.57	0.50	202	173	151	135	121	110	101	87	76
4.0	0.61	0.54	216	185	162	144	130	118	108	93	81

AMAZONE spray table for dosing disc 4916-39, (dia. 1.0 mm) (standard)

Pres-sure	Nozzle output per dosing disc		AUS spray rate (l/ha) / km/h								
	Water	AUS	6	7	8	9	10	11	12	14	16
(bar)	(l/min)										
1.0	0.43	0.38	153	131	114	101	92	84	77	66	57
1.2	0.47	0.41	167	143	124	110	100	91	84	72	62
1.5	0.53	0.47	187	160	141	126	112	102	94	80	71
1.8	0.58	0.51	204	175	154	137	122	112	102	88	77
2.0	0.61	0.53	216	185	162	144	130	118	108	93	81
2.2	0.64	0.56	227	194	170	151	136	124	114	97	85
2.5	0.68	0.59	240	206	180	160	142	132	120	103	90
2.8	0.71	0.62	251	215	189	168	151	137	126	108	95
3.0	0.74	0.64	262	224	197	175	158	143	131	112	99
3.5	0.79	0.69	280	236	210	186	168	153	140	118	105
4.0	0.85	0.74	302	259	226	201	181	165	151	130	113

AMAZONE spray table for dosing disc 4916-45, (dia. 1.2 mm)

Pres-sure	Nozzle output per dosing disc		AUS spray rate (l/ha) / km/h								
	Water	AUS	6	7	8	9	10	11	12	14	16
(bar)	(l/min)										
1.0	0.57	0.50	202	173	151	135	121	110	101	87	76
1.2	0.62	0.55	219	188	165	146	132	120	110	94	83
1.5	0.70	0.62	248	212	186	165	149	135	124	106	93
1.8	0.77	0.68	273	234	204	182	164	148	137	117	102
2.0	0.81	0.72	287	246	215	192	172	157	144	123	108
2.2	0.86	0.76	304	261	228	203	183	166	152	131	114
2.5	0.92	0.81	326	279	244	217	196	178	163	140	122
2.8	0.96	0.85	340	291	255	227	204	186	170	146	128
3.0	1.00	0.89	354	303	266	236	213	193	177	152	133
3.5	1.10	0.97	389	334	292	260	234	213	195	167	146
4.0	1.16	1.03	411	352	308	274	246	224	206	176	154

AMAZONE spray table for dosing disc 4916-55, (dia. 1.4 mm)

Pres-sure	Nozzle output per dosing disc		AUS spray rate (l/ha) / km/h								
	Water	AUS	6	7	8	9	10	11	12	14	16
(bar)	(l/min)										
1.0	0.86	0.76	304	261	228	203	183	166	152	131	114
1.2	0.93	0.82	329	282	247	219	198	180	165	141	124
1.5	1.05	0.93	372	319	278	248	223	203	186	160	139
1.8	1.15	1.02	407	349	305	271	245	222	204	175	153
2.0	1.22	1.08	432	370	324	288	259	236	216	185	162
2.2	1.27	1.12	450	385	337	300	270	245	225	163	168
2.5	1.35	1.19	478	410	358	319	287	261	239	205	179
2.8	1.43	1.27	506	434	380	337	304	276	253	217	190
3.0	1.47	1.30	520	446	390	347	312	284	260	223	195
3.5	1.59	1.41	563	482	422	375	338	307	282	241	211
4.0	1.69	1.50	598	513	449	399	359	327	299	257	225

13.3 Conversion table for spraying ammonium nitrate / urea solution (AUS) liquid fertiliser

(Density 1.28 kg/l, i.e. approx. 28 kg N for 100 kg of liquid fertiliser or 36 kg N for 100 litres of liquid fertiliser at 5

N kg	Sol. N l	Sol. N kg	N kg	Sol. N l	Sol. N kg	N kg	Sol. N l	Sol. N kg	N kg	Sol. N l	Sol. N kg
10	27.8	35.8	52	144.6	186.0	94	261.2	335.8	136	378.0	485.0
12	33.3	42.9	54	150.0	193.0	96	266.7	342.7	138	384.0	493.0
14	38.9	50.0	56	155.7	200.0	98	272.0	350.0	140	389.0	500.0
16	44.5	57.1	58	161.1	207.3	100	278.0	357.4	142	394.0	507.0
18	50.0	64.3	60	166.7	214.2	102	283.7	364.2	144	400.0	515.0
20	55.5	71.5	62	172.3	221.7	104	285.5	371.8	146	406.0	521.0
22	61.6	78.5	64	177.9	228.3	106	294.2	378.3	148	411.0	529.0
24	66.7	85.6	66	183.4	235.9	108	300.0	386.0	150	417.0	535.0
26	75.0	92.9	68	188.9	243.0	110	305.6	393.0	155	431.0	554.0
28	77.8	100.0	70	194.5	250.0	112	311.1	400.0	160	445.0	572.0
30	83.4	107.1	72	200.0	257.2	114	316.5	407.5	165	458.0	589.0
32	89.0	114.2	74	204.9	264.2	116	322.1	414.3	170	472.0	607.0
34	94.5	121.4	76	211.6	271.8	118	328.0	421.0	175	486.0	625.0
36	100.0	128.7	78	216.5	278.3	120	333.0	428.0	180	500.0	643.0
38	105.6	135.9	80	222.1	285.8	122	339.0	436.0	185	514.0	660.0
40	111.0	143.0	82	227.9	292.8	124	344.0	443.0	190	527.0	679.0
42	116.8	150.0	84	233.3	300.0	126	350.0	450.0	195	541.0	696.0
44	122.2	157.1	86	238.6	307.5	128	356.0	457.0	200	556.0	714.0
46	127.9	164.3	88	242.2	314.1	130	361.0	465.0			
48	133.3	171.5	90	250.0	321.7	132	367.0	471.0			
50	139.0	178.6	92	255.7	328.3	134	372.0	478.0			

14 Combination matrix

KOMBINATIONSMATRIX UG 2200

BBA-E-Nummer 570

UG 2200-	Pumpe		Armatur			Gestänge ohne Spritzleitung hydraulisch geklappt									Spritzleitung																						Wahlausrüstung				
															mit Dreifachdüsenkörper												mit Dreifachdüsenkörper und Druckumlaufsystem										zum Grundgerät			zum Spritzgestänge	
	BP280	BP235 + BP171	TG-5	TG-7	TG-9	S 15m	S 16m	S 18m	S 20m	S 21m	S 21/15m	S 24m	S 27m	S 28m	S 15m -5	S 16m -5	S 18m -5	S 20m -5	S 21m -5	S 21m -7	S 21/15m -7	S 24m -7	S 27m -7	S 27m -9	S 28m -7	S 28m -9	S 18m -5	S 20m -5	S 21m -5	S 21m -7	S 21/15m -7	S 24m -7	S 27m -7	S 27m -9	S 28m -7	S 28m -9	Amaspray+	Amatron +	Befüllanschluss	Einfachdüsenkörper	Flachstrahld.1-9
246	x		x			x									x																						x	x	x	x	x
247	x		x				x									x																					x	x	x	x	x
248	x		x					x									x																				x	x	x	x	x
249	x		x						x									x																			x	x	x	x	x
250	x		x							x									x																		x	x	x	x	x
251	x			x							x										x																x	x	x	x	x
252	x			x								x										x															x	x	x	x	x
253	x			x									x										x														x	x	x	x	x
254	x			x										x											x												x	x	x	x	x
255	x				x								x											x														x	x	x	x
256	x				x									x												x												x	x	x	x
257	x			x							x																				x						x	x	x	x	x
258	x			x								x																				x					x	x	x	x	x
259	x			x									x																				x				x	x	x	x	x
260	x			x										x																					x		x	x	x	x	x
261	x				x								x																					x				x	x	x	x
262	x				x									x																						x		x	x	x	x
263		x		x							x																				x						x	x	x	x	x
264		x		x								x																				x					x	x	x	x	x
265		x		x									x																				x				x	x	x	x	x
266		x		x										x																					x		x	x	x	x	x
267		x			x								x																					x				x	x	x	x
268		x			x									x																						x		x	x	x	x
269	x		x					x																			x										x	x	x	x	x
270	x		x						x																			x									x	x	x	x	x
271	x		x							x																			x								x	x	x	x	x
272	x			x						x																				x							x	x	x	x	x

Stand 11.2009

KOMBINATIONSMATRIX UG 3000

BBA-E-Nummer 570

	Pumpe			Armatur			Gestänge ohne Spritzleitung hydraulisch geklappt											Spritzleitung																										Wahlausrüstung						
																		mit Dreifachdüsenkörper														mit Dreifachdüsenkörper und Druckumlaufsystem												zum Grundgerät				zum Spritzgestänge		
UG 3000-	BP280	BP235 + BP171		TG-5	TG-7	TG-9	S 15m	S 16m	S 18m	S 20m	S 21m	S 21/15m	S 24m	S 27m	S 28m			S 15m -5	S 16m -5	S 18m -5	S 20m -5	S 21m -5	S 21m -7	S 21/15m -7	S 24m -7	S 27m -7	S 27m -9	S 28m -7	S 28m -9			S 18m -5	S 20m -5	S 21m -5	S 21m -7	S 21/15m -7	S 24m -7	S 27m -7	S 27m -9	S 28m -7	S 28m -9			Amaspray+	Amatron+		Befüllanschluss	Einfachdüsenkörper		Flachstrahld.1-9
193		x		x			x											x																										x	x		x	x		x
194		x		x				x											x																									x	x		x	x		x
195		x		x					x											x																								x	x		x	x		x
196		x		x						x											x																							x	x		x	x		x
197		x		x							x											x																						x	x		x	x		x
198		x			x						x												x																					x	x		x	x		x
199		x			x							x												x																				x	x		x	x		x
200		x			x								x												x																			x	x		x	x		x
201		x			x									x												x																		x	x		x	x		x
202		x			x										x													x																x	x		x	x		x
203		x				x								x													x																		x		x	x		x
204		x				x									x														x																x		x	x		x
220	x			x			x											x																										x	x		x	x		x
221	x			x				x											x																									x	x		x	x		x
222	x			x					x											x																								x	x		x	x		x
223	x			x						x											x																							x	x		x	x		x
224	x			x							x											x																						x	x		x	x		x
225	x				x						x												x																					x	x		x	x		x
226	x				x							x												x																				x	x		x	x		x
227	x				x								x												x																			x	x		x	x		x
237		x			x						x																									x								x	x		x	x		x
238		x			x							x																									x							x	x		x	x		x
239		x			x								x																									x						x	x		x	x		x
240		x			x									x																									x					x	x		x	x		x
241		x			x										x																										x			x	x		x	x		x
242		x				x								x																										x					x		x	x		x
243		x				x									x																											x			x		x	x		x
250	x				x									x												x																		x	x		x	x		x
251	x				x										x													x																x	x		x	x		x
252	x					x								x													x																		x		x	x		x
253	x					x									x														x																x		x	x		x
254	x			x					x																								x											x	x		x	x		x
255	x			x						x																								x										x	x		x	x		x
256	x			x							x																								x									x	x		x	x		x
257	x				x						x																									x								x	x		x	x		x
258	x				x							x																									x							x	x		x	x		x
259	x				x								x																									x						x	x		x	x		x
260	x				x									x																									x					x	x		x	x		x
261	x				x										x																										x			x	x		x	x		x
262	x					x								x																										x					x		x	x		x
263	x					x									x																											x			x		x	x		x

Stand 11.2009

14.1 Nozzle description

1) Flat-fan nozzle XRC		2) Flat-fan nozzle AD		3) Flat-fan nozzle AIR MIX		4) Flat-fan nozzle IDK	
plastic / exterior plastic, core ceramic (Lechler)		plastic (Lechler)		plastic (Agrotop)		plastic (Lechler)	
-015	-04	-015		-015	-05	-015	-04
-02	-05	-02		-02	-06	-02	-05
-025	-06	-03		-03		-025	
-03	-08	-04		-04		-03	
5) Flat-fan nozzle IDKN		**6) Flat-fan nozzle ID**		**7) Flat-fan nozzle IDN**		**8) Flat-fan nozzle TTI**	
plastic (Lechler)		plastic / exterior plastic - Kern Keramik (Lechler)		plastic (Lechler)		plastic (Teejet)	
-03		-015	-04	-025		-015	-04
-04		-02	-05	-03		-02	-05
		-025	-06			-025	-06
		-03				-03	
9) Double flat-fan nozzles IDKT		**10) Double flat-fan nozzles AVI-TWIN**		**11) Double flat-fan nozzles TD Hi Speed**			
exterior plastic, core ceramic (Lechler)		exterior plastic, core ceramic (Agrotop)		exterior plastic, core ceramic (Agrotop)			
-03		-015	-04	-015	-04		
-04		-02	-05	-02	-05		
-05		-025		-025			
		-03		-03			

AMAZONEN-WERKE

H. DREYER GmbH & Co. KG

Postfach 51
D-49202 Hasbergen-Gaste
Germany

Tel.: + 49 (0) 5405 501-0
Fax: + 49 (0) 5405 501-234
e-mail: amazone@amazone.de
http:// www.amazone.de

Plants: D-27794 Hude • D-04249 Leipzig • F-57602 Forbach
Branches in England and France

Manufacturers of mineral fertiliser spreaders, field sprayers, seed drills, soil cultivation machines, multipurpose warehouses and communal units